CITY COUNCIL REGULAR AGENDA

Tuesday, January 28, 2025

Notice is hereby given that the City Council of the City of Big Spring, Texas will meet in Regular Session on Tuesday, January 28, 2025, at 5:30 PM at the City Council Chambers Located at 307 East 4th Street, Big Spring, Texas. **We welcome the public to attend the meeting via telecommunication. Citizens will be able to view the City Council Meeting on Our Local Channel 17 through Suddenlink or on Our Website http://mybigspring.com/224/Channel-17-Live.**

CITY COUNCIL MEETING ETIQUETTE

Gentlemen are requested to remove their hats inside the City Council Chambers. As a courtesy to those in attendance, please place your cell phone on "Silent" or "Vibrate." Please, no talking during the meetings. Take all conversations outside so that others can hear.

Thank you!

Open Session

1. Call to Order — Moore
2. Invocation — Moore
3. Pledge of Allegiance to the United States Flag and to the Texas State Flag — Moore

Public Comment

Public Comment – Members of the public are entitled to speak on any topic. Additionally, members of the public may comment on any action item before or during its consideration. Speakers are Requested to Stand at the Podium and State Their Name and Address. Speakers Should Fill out the Form at the Podium and Turn it into the City Secretary. Please Do Not Exceed Five (5) Minutes.

4. **Public Comment** — Moore

Announcements, Presentations and Public Hearings

Public Hearings – The Council will take Input on Items Requiring Public Hearing Items **Prior** to any Action.

5.	Open Public Hearing		Moore
6.	PUBLIC HEARING - Consideration and Possible Action Concerning Abatement of Public Nuisance, at 206 NE 6TH (REAR), BIG SPRING, TEXAS 79720 – LEGAL DESCRIPTION: SECTION 42, BLOCK 32, TOWNSHIP 1 NORTH, TRACT 38, WILLIAM B CURRIE SUBDIVISION – OWNER: LUPE REYES / MANUEL REYES / CARRIE CHRISTINE LOYA	6-51	Hagen
7.	Close Public Hearing		Moore

City Manager's Report

8. City Manager's report on the following items: — Darden

- Update - Large Item Pickup, District 1
- Update - Rollout Publication
- Reminder - Chamber of Commerce Banquet - January 30, 2025
- Reminder - Howard County Day at the Capital - February 5 & 6, 2025

Consent Items

9.	Approval of the City Council Minutes of the Regular Meeting of January 14, 2025.	52-59	Davis
10.	Acknowledge Receipt of the McMahon-Wrinkle Aviation Advisory Board Minutes for the Regular Meetings of October 17, 2024 and November 21, 2024.	60-63	Feeley
11.	Final Reading of a Resolution Supporting the Proposed Project for the Texas Department of Housing and Community Affairs for 2025 Competitive 9% Housing Tax Credit for the Big Spring Lofts Project; and Providing an Effective Date	64-65	Medina
12.	Final Reading of a Resolution Granting the Consent of the City of Big Spring, Texas, to the Creation of Howard County Emergency Services District No. 1; Providing for the Repeal of Conflicting Legislation; Providing for Severability; Finding	66-70	Darden

and Determining that the Meetings at Which the Resolution were Discussed were Open to the Public as Required by Law; and Establishing an Effective Date.

13.	Final Reading of a Resolution Amending the Authorized Representatives Empowered to Transmit and Withdraw Funds from TexStar; and Providing an Effective Date	71-73	Smith
14.	Final Reading of an Ordinance Amending Chapter 38 of the Big Spring City Code "Administration," Article II "City Council," By Repealing Section 38-9 "Curfew for Minors"; Providing for Severability; and Providing for an Effective Date	74-77	Williams
15.	Final Reading of an Ordinance Amending Ordinance Number 028-2024 Which Adopted the Annual Budget for the City of Big Spring, Texas for the Fiscal Year Beginning October 1, 2024 and Ending September 30 2025 by Increasing the Airpark Fund for the Purpose of Conducting an Airfield Pavement Study; Providing for Severability; and Providing an Effective Date.	78-79	Smith

Vouchers

16.	Vouchers for 01/17/25 $ 2,692,041.14 Vouchers for 01/24/25 $ 1,264,901.73		Ornelas

Bids

17.	Consideration and Possible Action on Awarding a Bid for the 2024 Water and Sewer Line Replacement Project and Authorizing the City Manager or His Designee to Execute any Necessary Documents	80-82	Bowles
18.	Consideration and Possible Action on Awarding a Bid for a Fairway Mower for the Comanche Trail Golf Course and Authorizing the City Manager or His Designee to Execute any Necessary Documents	83-84	Medina
19.	Consideration and Possible Action on Awarding a Bid for ADA Compliant Parking Lot at the Comanche Trail Park and Authorizing the City Manager or His Designee to Execute any Necessary Documents	85	Medina

New Business

20.	First Reading of a Resolution Calling for a General Election to be Held on May 3, 2025 for the Purpose of Electing One	86-87	Moore

	Person to Serve as Mayor of the City of Big Spring and One Person to Serve as City Council Member for District Five; Providing for the Conduct of the Election; Designating Several Polling Places; Authorizing the Mayor to Execute Notice and Have the Notice Posted for the Purpose of Notifying the Public of Said Election; and Providing for Severability		
21.	Consideration and Possible Action of an Election Services Contract with the Howard County Elections Administrator and Authorizing the City Manager or His Designee to Execute any Necessary Documents	88-90	Darden
22.	Consideration and Possible Action of a Joint Election Agreement with Big Spring Independent School District and Authorizing the Mayor to Execute any Necessary Documents	91-93	Darden
23.	Consideration and Possible Action Authorizing an Event Funding Request from CVB to Desert Athletics Fitness Council for a Together Trail Race.	94-99	Medina
24.	**Boards and Committees** Consideration and Possible Action on the Below Listed Board Regarding an Expired Term of 9/30/2024: <u>Zoning Board of Adjustments</u> Dist. 5 - Veronica Zuniga Reappointment		Moore

<u>Council Input</u>

25.	Input	Moore
26.	Adjourn	Moore

The City Council reserves the right to meet in executive session on any agenda item should the need arise pursuant to Chapter 551, Subchapter D of the Texas Government Code, or the Texas Disciplinary Rules of Professional Conduct.

I hereby certify that this agenda was posted on the official bulletin board at the City of Big Spring, City Hall Building, located outside 310 Nolan Street. Given by order of the City Council and **Posted on Friday, January 24, 2025 at 4:30 p.m.** in accordance with Title 5, Texas Government Code and Chapter 551.

In addition, this agenda and supporting documents are posted on the City of Big Spring's Website, www.mybigspring.com, in accordance with legal requirements.

Tami L. Davis, City Secretary

THE MEETING FACILITY IS ACCESSIBLE TO DISABLED PERSONS. ANY DISABLED PERSON NEEDING SPECIAL ACCOMMODATION OR A HEARING IMPAIRED PERSON WISHING TO HAVE AN INTERPRETER SHOULD REQUEST SERVICES AT LEAST 48 HOURS PRIOR TO THE SCHEDULED MEETING BY CONTACTINGTAMI DAVIS AT 432-264-2513 OR EMAIL: TDAVIS@MYBIGSPRING.COM.

206 NE 6TH (REAR)

Code Compliance Official: Shannon Fant

Exhibit A-1

STATE OF TEXAS §
§
COUNTY OF HOWARD §

AFFIDAVIT OF SHANNON FANT
CONCERNING 206 NE 6TH (REAR)

BEFORE ME, the undersigned authority, on this day, personally appeared **Shannon Fant**, who, being by me duly sworn, deposed as follows:

"My name is **Shannon Fant**. I am over 21 years of age, of sound mind, capable of making this affidavit, and personally acquainted with the facts herein stated:

"I am a Code Compliance Official for the City of Big Spring, Texas. In the course of my duties, I inspect properties for compliance with Texas state law and the ordinances of the City of Big Spring. I am an employee of the City of Big Spring and am familiar with the manner in which its records are created and maintained by virtue of my duties and responsibilities. Attached are pages of records relating to the Code Compliance Case for **206 NE 6TH (REAR)**, Big Spring, Texas. These are exact duplicates of original records. The records were made at or near the time of each act, event, or finding set forth. The records were made by, or from information transmitted by, persons with knowledge of the matters set forth. The records were kept in the course of regularly conducted business activity. It is the regular practice of the business activity to make the records."

SIGNED on the 22 day of January, 2025.

Fant
AFFIANT

SWORN TO AND SUBSCRIBED before me this 22nd day of January, 2025 by the above referenced Affiant.

Stephanie K. Arita
Notary Public, State of Texas

STEPHANIE KEMUNTO ARITA
Notary ID #135144341
My Commission Expires
October 28, 2028

Exhibit A-2

Property Details

Account		
Property ID:	294422	**Geographic ID:** 51442030800
Type:	Real	**Zoning:**
Property Use:		**Condo:**
Location		
Situs Address:	206 NE 6TH (REAR)	
Map ID:		**Mapsco:**
Legal Description:	SC 42 BK 32 1N TR 38 WILLIAM B CURRIE 115X122 789 ACQ 1995 BLK/TRACT 32 1N 0.322 ACRES	
Abstract/Subdivision:		
Neighborhood:	NTSD	
Owner		
Owner ID:	294998	
Name:	REYES LUPE ET UX	
Agent:		
Mailing Address:	PO BOX 1861 BIG SPRING , TX 79721	
% Ownership:	100.00%	
Exemptions:	DP - DISABILITY HS - HOMESTEAD For privacy reasons not all exemptions are shown online.	

Property Values

Improvement Homesite Value:	$4,705 (+)
Improvement Non-Homesite Value:	$0 (+)
Land Homesite Value:	$3,506 (+)
Land Non-Homesite Value:	$0 (+)

Agricultural Market Valuation:	$0 (+)
Market Value:	$8,211 (=)
Agricultural Value Loss:	$0 (-)
Appraised Value:	$8,211 (=)
HS Cap Loss/Circuit Breaker:	$5,019 (-)
Assessed Value:	$3,192
Ag Use Value:	$0

Information provided for research purposes only. Legal descriptions and acreage amounts are for Appraisal District use only and should be verified prior to using for legal purpose and or documents. Please contact the Appraisal District to verify all information for accuracy.

Property Taxing Jurisdiction

Owner: REYES LUPE ET UX **%Ownership:** 100.00%

Entity	Description	Tax Rate	Market Value	Taxable Value	Estimated Tax	Freeze Ceiling
01H	HOWARD COUNTY	0.238916	$8,211	$0	$0.00	
02B	CITY OF BIG SPRING	0.673163	$8,211	$0	$0.00	
03B	BIG SPRING ISD	0.930900	$8,211	$0	$0.00	$0.00
052	HOWARD COLLEGE	0.168395	$8,211	$0	$0.00	

Total Tax Rate: 2.011374

Estimated Taxes With Exemptions: $0.00

Estimated Taxes Without Exemptions: $165.16

STATE OF TEXAS §
§
COUNTY OF HOWARD §

CERTIFICATION
206 NE 6TH (REAR) CASE NOTES

"This record, attached as **Exhibit A-3**, was made at or near the time by – or from information transmitted by a person or persons with the City with knowledge.

This record was kept in the course of a regularly conducted business activity of the Code Compliance Department of the City of Big Spring, Texas.

Making this record was a regular practice of that activity.

1. The City uses a computer.
2. The computer is reliable.
3. The City has developed procedures for inserting data into the computer.
4. The procedure has built-in safeguards to ensure accuracy and to identify errors.
5. The City keeps the computer in a good state of repair.
6. I had the computer readout certain data.
7. I used the proper procedures to obtain the readout.
8. The computer was in working order at the time I obtained the readout.
9. I recognize the attached **Exhibit A-3** as the readout."

SIGNED on the 22 day of January, 2025.

AFFIANT

SWORN TO AND SUBSCRIBED before me this 22nd day of January, 2025 by the above referenced Affiant.

Stephanie K. Arita
Notary Public, State of Texas

STEPHANIE KEMUNTO ARITA
Notary ID #135144341
My Commission Expires
October 28, 2028

Exhibit A-3

CASE NOTES

Report Run On: Tuesday, 05 November 2024 09:06

Case # 24-00000045 **Parcel # :** 294422

Site Address: 206 NE 6TH (REAR)

Case Description: TWO SUBSTANDARD BUILDINGS ON PROPERTY

Note Type	Note Code	Text	Created By	Begin Date	End Date
PHOTOS		REINSPECTED PROPERTY FOUND TO NOT BE MAINTAINED AND NO RESPONSE FROM THE PROPERTY OWNER TOOK ICS WILL PROCEED	Shannon Fant	11/05/24	
GENERAL		sent nov to the property owner will follow up	Shannon Fant	08/22/24	
SITE VISIT		INSPECTED PROPERTY FOUND THAT THE PROPERTY IS A FRONT AND A REAR THE REAR TO THIS ADDRESS HAS TWO BUILDINGS THAT ARE SUBSTANDARD I WILL SEND NOV TO THE PROPERTY OWNER	Shannon Fant	08/21/24	
SITE VISIT		TWO SUBSTANDARD STRUCTURES ON THE PROPERTY	Shannon Fant	02/01/24	
CORRECTIVE ACTION		THE STRUCTURES (TWO) ON THIS PROERTY DOES NOT MEET THE MINIMUM BUILDING STANDARDS THE STRUCTURE NEEDS TO BE BROUGHT UP TO BUILDING CODE OR DEMOLISHED/REMOVED. DEADLINE FOR COMPLIANCE IS SEVEN (7) DAYS FROM THE DATE OF MAILING 02.01.2024	Shannon Fant	02/01/24	

STATE OF TEXAS §
§
COUNTY OF HOWARD §

CERTIFICATION OF
PHOTOGRAPHS BY SHANNON FANT

"With regard to the photographs in **Exhibits A-4** I am familiar with and recognize the scene depicted in the photographs. On December 27, 2023 and August 21, 2024, I inspected the property described as:

> SECTION 42, BLOCK 32, TOWNSHIP 1 NORTH, TRACT 38, WILLIAM B CURRIE SUBDIVISION Big Spring, Howard County, Texas, also known as **206 NE 6TH (REAR)**, Big Spring, Texas.

Each of the photographs is a fair and accurate depiction of the scene at the relevant time."

SIGNED on the 22 day of January, 2025.

Fant
AFFIANT

SWORN TO AND SUBSCRIBED before me this 22nd day of January, 2025 by the above referenced Affiant.

Stephanie K. Arita
Notary Public, State of Texas

STEPHANIE KEMUNTO ARITA
Notary ID #135144341
My Commission Expires
October 28, 2028

Exhibit A-4

Network time is not synchronized
Local: Dec 27, 2023 10:57:10 AM CST
32°15'33.982"N, 101°28'42.304"W

Network time is not synchronized
Local: Dec 27, 2023 10:57:27 AM CST
32°15'33.982"N -101°28'42.304"W

Galaxy Tab S8+
August 21, 2024 8:52 AM

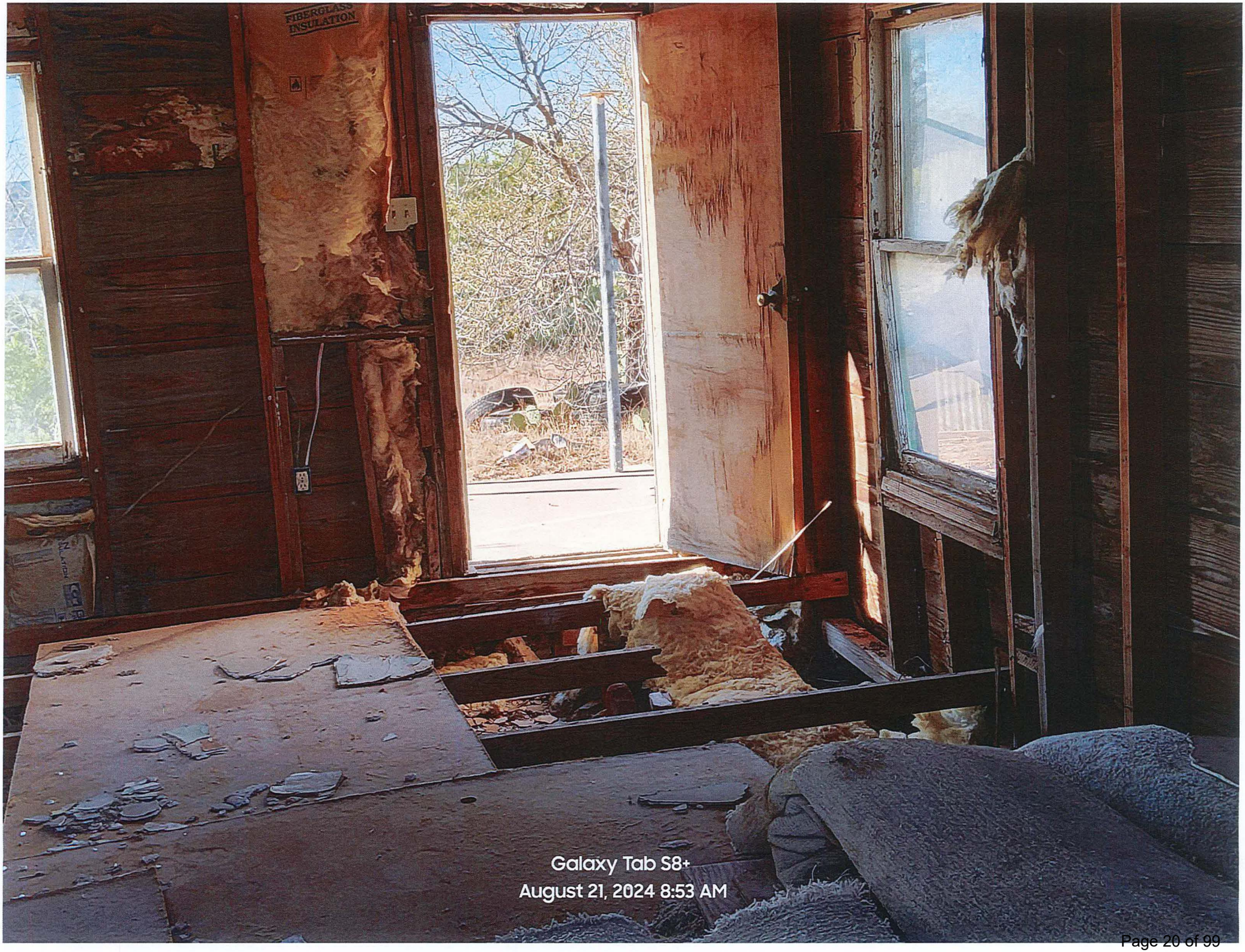
FIBERGLASS
INSULATION
Galaxy Tab S8+
August 21, 2024 8:53 AM

Galaxy Tab S8+
August 21, 2024 8:53 AM

Galaxy Tab S8+
August 21, 2024 8:53 AM

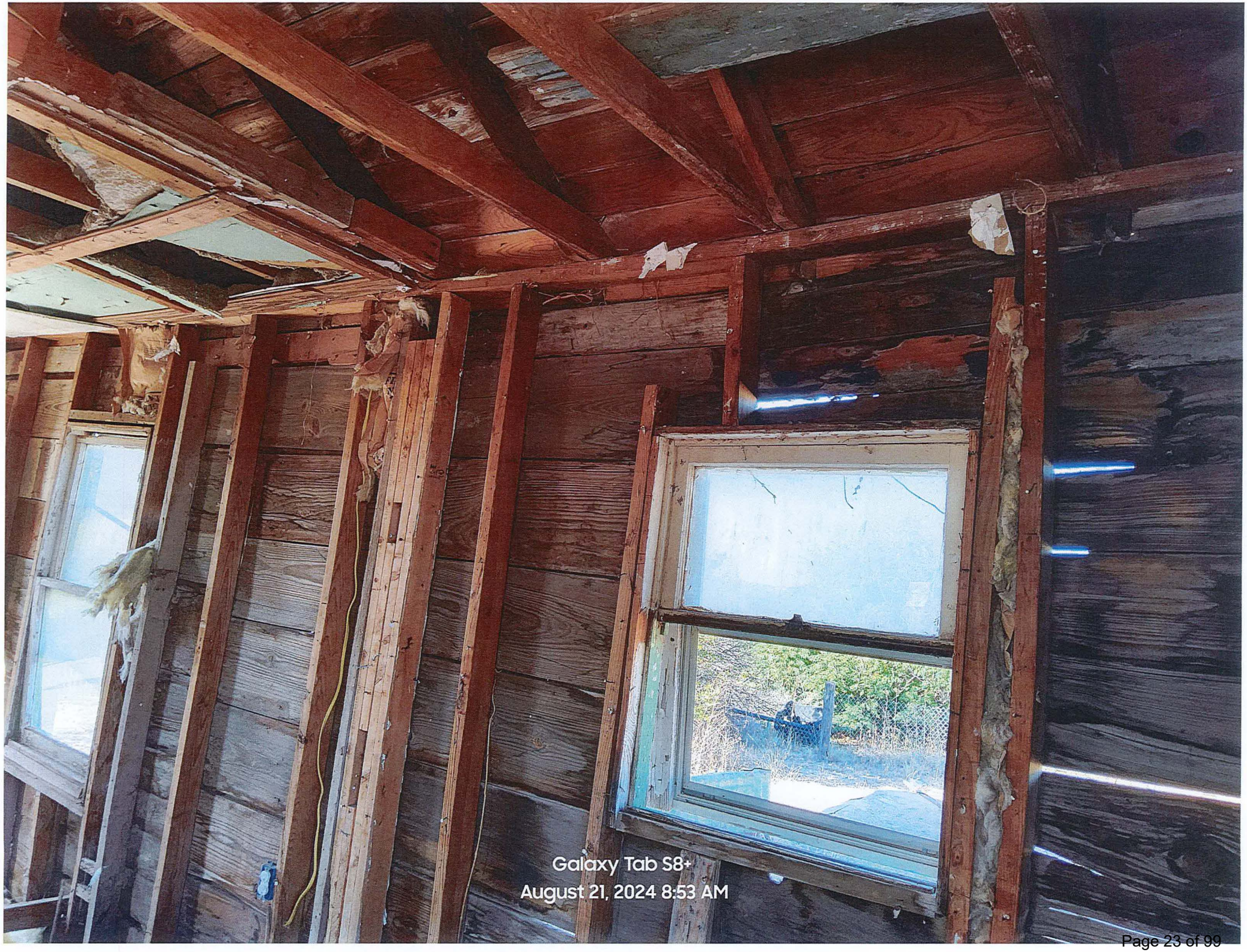
Galaxy Tab S8+
August 21, 2024 8:53 AM

Galaxy Tab S8+
August 21, 2024 8:53 AM

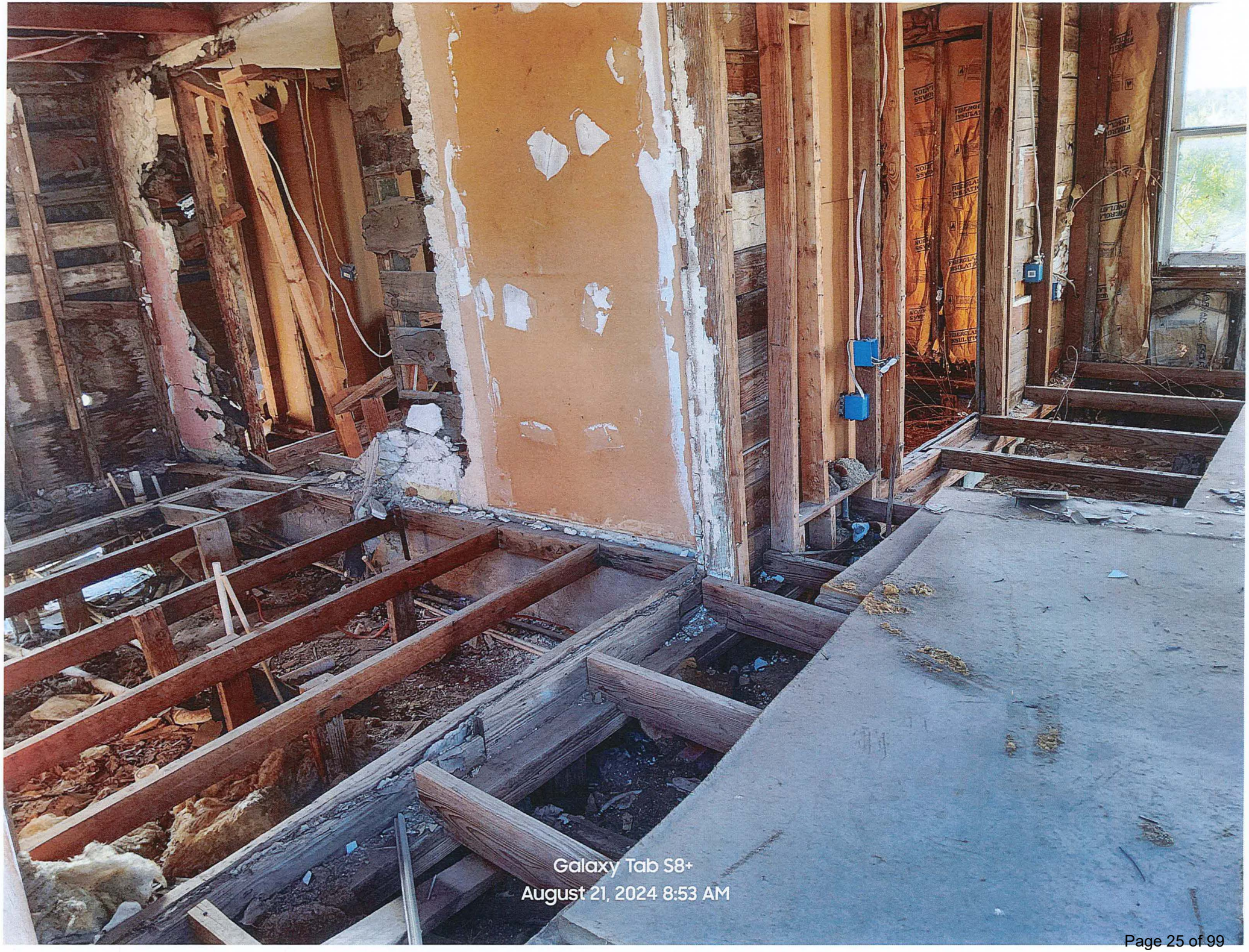
Galaxy Tab S8+
August 21, 2024 8:53 AM

Galaxy Tab S8+
August 21, 2024 8:53 AM

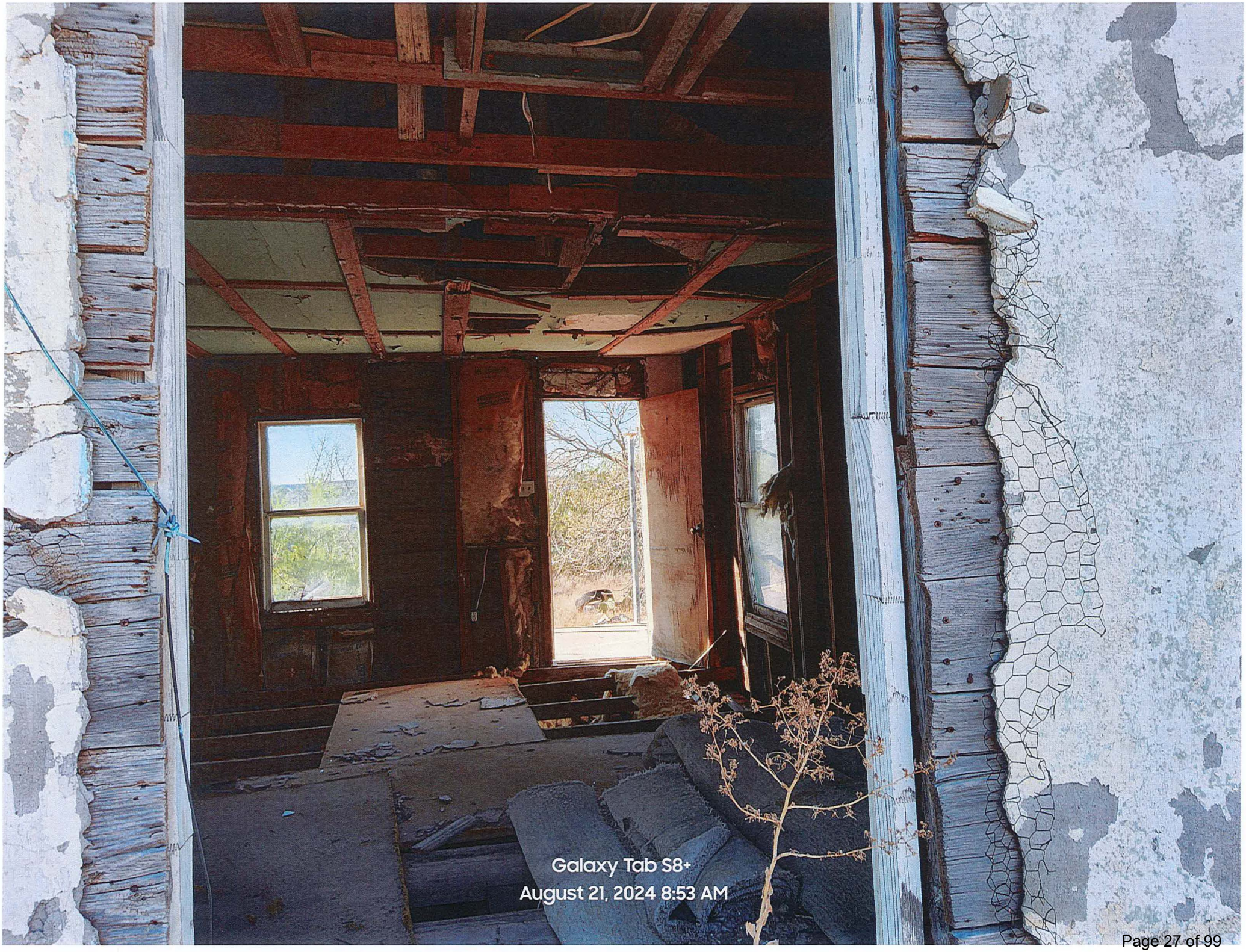
Galaxy Tab S8+
August 21, 2024 8:53 AM

FIBERGLASS INSULATION
Galaxy Tab S8+
August 21, 2024 8:53 AM

Galaxy Tab S8+
August 21, 2024 8:54 AM

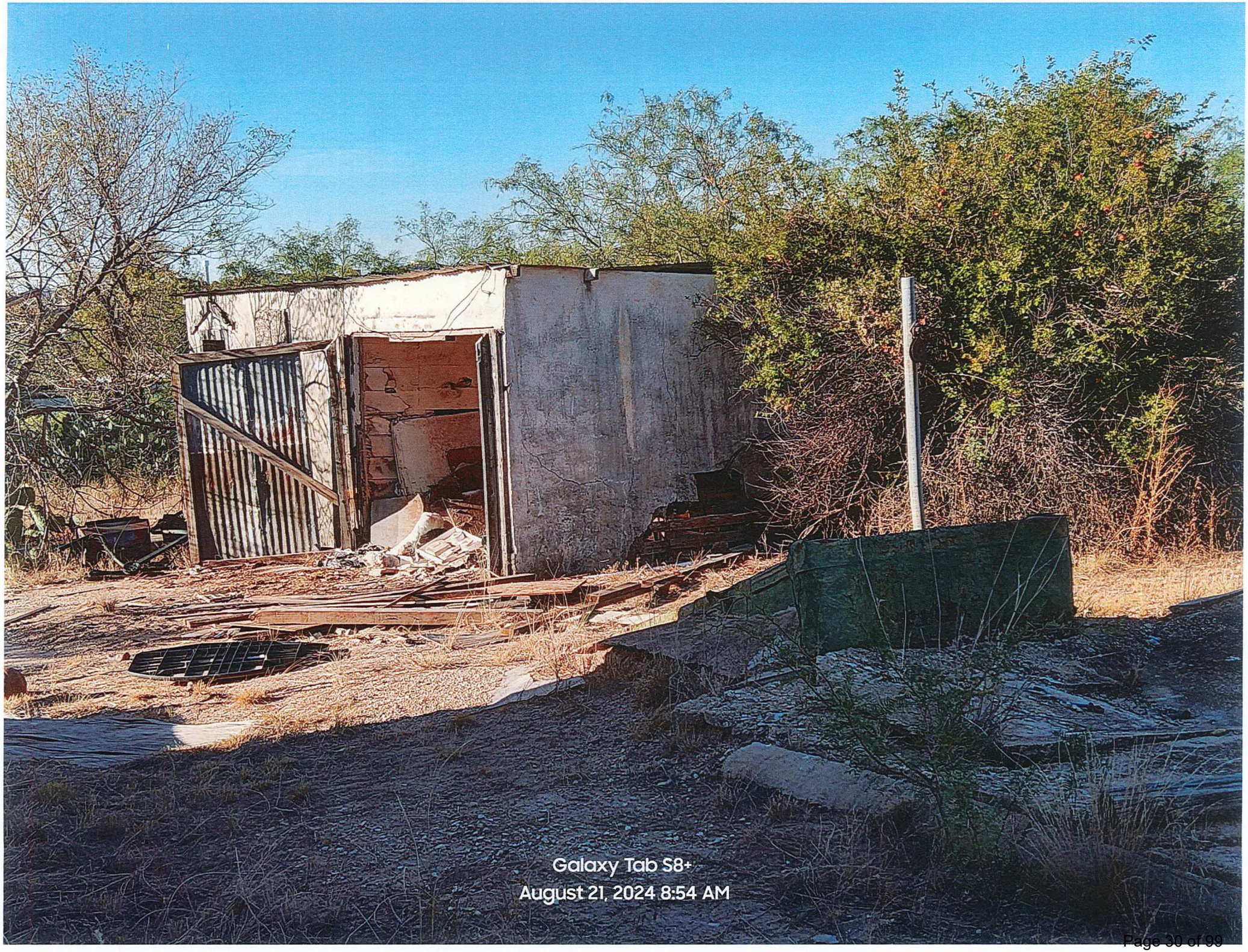
Galaxy Tab S8+
August 21, 2024 8:54 AM

Galaxy Tab S8+
August 21, 2024 8:54 AM

Galaxy Tab S8+
August 21, 2024, 8:55 AM

STATE OF TEXAS §
§
COUNTY OF HOWARD §

CERTIFICATION
NOTICE SENT BY SHANNON FANT

"The document in **Exhibit A-5** presents factual findings from a legally authorized investigation for code compliance. The document is a copy of the official record."

Certified Mail Return for **Exhibit A-5** is also attached.

SIGNED on the 22 day of January, 2025.

Sfant
AFFIANT

SWORN TO AND SUBSCRIBED before me this 22nd day of January, 2025 by the above referenced Affiant.

Stephanie K. Arita
Notary Public, State of Texas

STEPHANIE KEMUNTO ARITA
Notary ID #135144341
My Commission Expires
October 28, 2028

Exhibit A-5

City of Big Spring Code Compliance

217 East 3rd St. Big Spring TX 79720 - Ph: 432-264-2504

NOTICE OF VIOLATION

Re: 206 NE 6TH (REAR) BIG SPRING,TX79720
Legal Description: SC 42 BK 32 1N TR 38 WILLIAM B CURRIE 115X122 789 ACQ 1995 BLK/TRACT 32 1N 0.322 ACRES

Date 08/22/2024 **Case No:24-00000045**

REYES LUPE ET UX
PO BOX 1861
BIG SPRING, TX 79721

Dear REYES LUPE ET UX
The City of Big Spring has determined that the following section of the **2021 property Maintenance Code of Big Spring** has been violated, constituting a nuisance:

Violation:
SUBSTANDARD STRUCTURE

Description of Violation:

City of Big Spring Code Compliance

217 East 3rd St. Big Spring TX 79720 - Ph: 432-264-2504

NOTICE OF VIOLATION

Re: 206 NE 6TH (REAR) BIG SPRING,TX79720

Legal Description: SC 42 BK 32 1N TR 38 WILLIAM B CURRIE 115X122 789 ACQ 1995 BLK/TRACT 32 1N 0.322 ACRES

304.1.1 UNSAFE CONDITIONS. The following conditions shall be determined as unsafe and shall be repaired or replaced to comply with the International Building Code or the International Existing Building Code as required for existing buildings:

1.Structural members have deterioration or distress that appears to reduce their load-carrying capacity.2.The anchorage of the floor or roof to walls or columns, and of walls and columns to foundations have deterioration or distress that appears to reduce their load-carrying capacity.3.Structures or components thereof have deterioration or distress that appears to reduce their load-carrying capacity.4.Siding and masonry joints including joints between the building envelope and the perimeter of windows, doors and skylights are not maintained, weather resistant or watertight.5.Reserved.6.Foundation systems that are not firmly supported by footings, are not plumb and free from open cracks and breaks, are not properly anchored or are not capable of supporting all nominal loads and resisting all load effects.7.Exterior walls that are not anchored to supporting and supported elements or are not plumb and free of holes, cracks or breaks and loose or rotting materials, are not properly anchored or are not capable of supporting all nominal loads and resisting all load effects.8.Roofing or roofing components that have defects that admit rain, roof surfaces with inadequate drainage, or any portion of the roof framing that is not in good repair with signs of deterioration, fatigue or without proper anchorage and in capable of supporting all nominal loads and resisting all load effects.9.Flooring and flooring components with defects that affect serviceability or flooring components that show signs of deterioration or fatigue, are not properly anchored or are incapable of supporting all nominal loads and resisting all load effects.10.Veneer, cornices, belt courses, corbels, trim, wall facings and similar decorative features not properly anchored or that are anchored with connections not capable of supporting all nominal loads and resisting all load effects.11.Overhang extensions or projections including, but not limited to, trash chutes, canopies, marquees, signs, awnings, fire escapes, standpipes, and exhaust ducts not properly anchored or that are anchored with connections not capable of supporting all nominal loads and resisting all load effects.12.Exterior stairs, decks, porches, balconies, and all similar appurtenances attached thereto, including guards and handrails, are not structurally sound, not properly anchored or that are anchored with connections not capable of supporting all nominal loads and resisting all load effects.13.Chimneys, cooling towers, smokestacks, and similar appurtenances not structurally sound or not properly anchored, or that are anchored with connections not capable of supporting all nominal loads and resisting all load effects.

Corrective Action:

THE STRUCTURES (TWO) ON THIS PROERTY DOES NOT MEET THE MINIMUM BUILDING STANDARDS THE STRUCTURE NEEDS TO BE BROUGHT UP TO BUILDING CODE OR DEMOLISHED/REMOVED.

DEADLINE FOR COMPLIANCE IS SEVEN (7) DAYS FROM THE DATE OF MAILING 08.22.2024

For further information about this notice, please contact the following person:

Issued by:

Shannon Fant	Code Compliance
432.264.2508	sfant@mybigspring.com
Phone	Email Address

If this matter has been taken care of please notify this office at **(432)264-2504**

It is the sincere hope of the City that you will cooperate with us in helping to make Big Spring an attractive, healthful place in which to live.

Sincerely,

SFant

City of Big Spring Code Compliance

217 East 3rd St. Big Spring TX 79720 - Ph: 432-264-2504

NOTICE OF VIOLATION

Re: 206 NE 6TH (REAR) BIG SPRING,TX79720
Legal Description: SC 42 BK 32 1N TR 38 WILLIAM B CURRIE 115X122 789 ACQ 1995 BLK/TRACT 32 1N 0.322 ACRES

Shannon Fant - Code Compliance

Case number: 24-00000045

BIG SPRING
TEXAS

Code Compliance

217 E 3rd St., Big Spring, Texas 79720 · Ph. 432-264-2505

NOTICE OF VIOLATION
AND NOTICE OF HEARING

Sent via: Certified Mail; Return Receipt Requested

January 17, 2025

Lupe Reyes & Manuel Reyes
P.O. Box 1861
Big Spring, Texas 79721

Lupe Reyes & Manuel Reyes & Carrie Christine Loya & Betty Pettegrew
206 NE 6th (Rear)
Big Spring, Texas 79720

Manuel Franco Reyes & Carrie Christine Loya
206 NE 10th St.
Big Spring, Texas 79720

Carrie Chistine Loya
711 N Aylesford St.
Big Spring, Texas 79720

Betty Pettegrew
935 W. Silversands
San Antonio, Texas 78216

***Re:* 206 NE 6TH (REAR), BIG SPRING, TEXAS 79720**
LEGAL DESCRIPTION: SECTION 42, BLOCK 32, TOWNSHIP 1 NORTH, TRACT 38, WILLIAM B CURRIE SUBDIVISION, Howard County

Big Spring Code Compliance has determined that at the following structure(s): MAIN STRUCTURE AND SECONDARY STRUCTURE, at the property as stated above, is/are in violation of the following section(s) of the **Property Maintenance Code of Big Spring (PMC)**, constituting a nuisance:

VIOLATION	DESCRIPTION OF

	VIOLATION
111.1.5 HAZARDOUS STRUCTURE OR PREMISES. For the purpose of this code, any structure or premises that has any or all of the conditions or defects described as follows shall be considered to be hazardous: 3. Any building, structure, or portion thereof that is dangerous. 6. The building or structure, or any portion thereof, is clearly unsafe for its use and occupancy. 7. The building or structure is neglected, damaged, dilapidated, unsecured or abandoned so as to become an attractive nuisance to children who might play in the building or structure to their danger, becomes a harbor for vagrants, criminals, or immoral persons, or enables persons to resort to the building or structure for committing a nuisance or an unlawful act. 9. A building or structure, used or intended to be used for dwelling purposes, because of inadequate maintenance, dilapidation, decay, damage, faulty construction or arrangement, inadequate light, ventilation, mechanical or plumbing system, or otherwise, is determined by the code official to be unsanitary, unfit for human habitation or in such a condition that is likely to cause sickness or disease. 11. Any portion of a building remains on a site after the demolition or destruction of the building or structure or whenever any building or structure is abandoned so as to constitute such building or portion thereof as an attractive nuisance or hazard to the public.	The structures are in disrepair with visible signs of deterioration and dilapidation, making the structures dangerous and unsafe for use and/or occupancy. Sections of the structures are missing boards or have degraded boards and siding, leaving the structures exposed to the elements. The structures are neglected, damaged, dilapidated, unsecured, and abandoned so as to constitute an attractive nuisance. The Main Structure is dilapidated so as to be unfit for human habitation. Hazardous condition.

The following actions are required to correct the violation(s) at the structure(s) as stated above:

Corrective Action Sought by Code Compliance

Secure and vacate the structure(s) until the violation(s) are resolved, and:

REPAIR OR DEMOLISH AND REMOVE

of MAIN STRUCTURE AND SECONDARY STRUCTURE.

For further information about this notice, please contact the following person:

Issued by

Shannon Fant	Code Compliance Official
Name	*Title*
+1 (432) 264-2508	sfant@mybigspring.com
Phone	*E-mail*

The City's goal is voluntary compliance.

FAILURE TO TAKE THE CORRECTIVE ACTION BY THE DEADLINE MAY RESULT IN FINE. Failure to take the corrective action regarding the nuisance(s) by the prescribed deadline(s) may result in a complaint (a criminal charge, Class C Misdemeanor) sworn against you in the Municipal Court of Big Spring alleging the violation. A person found guilty may be convicted by the Court and fined. Each day that a violation continues after due notice has been served is deemed a separate offense. A convicted person may appeal their case to Howard County Court. This punishment is separate from and in addition to any abatement action that the City may perform and cannot result in a lien.

YOU ARE HEREBY NOTIFIED THAT THE CITY HAS INITIATED PROCEEDINGS TO ABATE THE ABOVE-DESCRIBED NUISANCES AT YOUR EXPENSE. This proceeding is held before a hearing board (either City Council or the Board of Adjustment and Appeals). The hearing board will review the case and rule on the City's request to abate the nuisance. If so ordered by the hearing board, the City will abate the nuisance and send you and/or the owner(s) an invoice for the City's costs plus a civil penalty, typically 25% of the amount of the costs. In the event you and/or the owner(s) do not pay the invoice promptly, the City of Big Spring will assess a lien against the property to secure payment for services rendered and the civil penalty. You have the right to appeal the costs, lien, and civil penalty to the District Court. The abatement procedure is separate from and in addition to any charge filed in Municipal Court.

The City Council will serve as the Hearing Board for your case. The hearing is scheduled for **5:30 PM, January 28, 2025** at the City Council Chambers located at **307 E 4th St., Big Spring, Texas 79720**. You are encouraged to attend this hearing to demonstrate the scope of work that may be required to comply with the Building Codes and the time it will take to reasonably perform the work.

CONDUCT OF THE HEARING. The Structural Standards Ordinance of the Big Spring City Code provides the following concerning the conduct of the hearing:

SECTION A-1.10. Rights of Parties

(a) Rules. Hearings need not be conducted according to the technical rules relating to evidence and witnesses.

(b) Admissibility of Evidence. Any relevant evidence shall be admitted if it is the type of evidence on which responsible persons are accustomed to rely in the conduct of serious affairs, regardless of the existence of any common law or statutory rule which might make improper the admission of such evidence over objection in civil actions in courts of competent jurisdiction in this State.

(c) Exclusion of Evidence. Irrelevant and unduly repetitious evidence shall be excluded.

(d) Rights of Parties. Each party shall have the following rights, among others:

1. To call and examine witnesses on any matter relevant to the issues of the hearing;

2. To introduce documentary and physical evidence;

3. To cross-examine opposing witnesses on any matter relevant to the issues of the hearing;

4. To impeach any witness regardless of which party first called him to testify;

5. To rebut the evidence against him;

6. To represent himself or to be represented by anyone of his choice who is lawfully permitted to do so.

Section C-9.02 (c) The City Attorney shall present the case for the City. If the City Attorney is recused or disqualified, the City Manager shall determine who shall present the case for the City.

YOU HAVE A RIGHT TO APPEAL THE DECISION OF THE HEARING BOARD. If the Hearing Board enters an order to abate the violation(s) at the structure(s) at the property, the order is preliminary, allowing you to appeal the order to District Court within thirty (30) days pursuant to Section 8.03 of the Structural Standards Ordinance of the Big Spring City Code. If you fail to appeal the Hearing Board's ruling within that time, such order shall become the final order.

FAILURE TO COMPLY/ATTACHMENT OF LIEN. If the owner of a premises fails to comply with an order of the Board within the time prescribed, and the City conducts abatement or work, either through an available public agency or by contract or arrangement with private persons, and the cost of such abatement work shall be charged against the real estate upon which the nuisance is located and shall be a lien on such real estate.

NOTICE TO OWNER: According to the real property records of Howard County, you own the real property described in this notice. If you no longer own the property, you must execute an affidavit stating that you no longer own the property and stating the name and last known address of the person who acquired the property from you. The affidavit must be delivered in person or by certified mail, return receipt requested, to this office not later than the 20th day after the date you receive this notice. If you do not send the affidavit, it will be presumed that you own the property described in this notice, even if you do not.

NOTICE TO EMPLOYEE OF OWNER: If you are an individual employed by the owner of the property, or a company that manages the property on behalf of the owner, you may be personally liable for criminal or civil penalties resulting from the violation under Section 250.003, Texas Local Government Code, unless, not later than the fifth calendar day after this notice you provide the property owner's name, current street address, and telephone number to the Code Compliance Officer who sent this notice.

TRANSFER OF OWNERSHIP UNLAWFUL: Please be advised that until this order is complied with, it shall be unlawful (being a Class C Misdemeanor) to transfer ownership of the property— with conditions and exceptions stated in PMC Sec. 111.6.

RIGHTS AND REMEDIES RESERVED. The City of Big Spring expressly reserves any additional rights and remedies that may be available to it, including but not limited to injunctive or equitable relief.

CITY CODE. The City Code is online at https://codelibrary.amlegal.com/codes/bigspringtx. *See* Big Spring City Code, Chapter 36, Property Maintenance Code of Big Spring; and 2021 International Property Maintenance Code, available for public inspection at the Office of the City Secretary at 310 Nolan St., Big Spring, Texas and available online for free at https://codes.iccsafe.org/codes/i-codes.

Sincerely,

M. Garcia

Code Enforcement Officer Malissa Garcia signing on behalf of:
Shannon Fant, Code Compliance Official
City of Big Spring, Texas

9589 0710 5270 2278 6320 41

U.S. Postal Service™
CERTIFIED MAIL® RECEIPT
Domestic Mail Only

For delivery information, visit our website at *www.usps.com®*.

OFFICIAL USE

Certified Mail Fee
$

Extra Services & Fees *(check box, add fee as appropriate)*
- ☐ Return Receipt (hardcopy) $
- ☐ Return Receipt (electronic) $
- ☐ Certified Mail Restricted Delivery $
- ☐ Adult Signature Required $
- ☐ Adult Signature Restricted Delivery $

Postage
$

Total Postage and Fees
$

1/17/2025

Postmark Here

206 NE 6TH
(REAR) Notice

Sent To Betty Pottegrew
Street and Apt. No., or PO Box No. 935 W. Silversands
City, State, ZIP+4® San Antonio, TX 78216

PS Form 3800, January 2023 PSN 7530-02-000-9047 See Reverse for Instructions

9589 0710 5270 2278 6320 34

U.S. Postal Service™
CERTIFIED MAIL® RECEIPT
Domestic Mail Only

For delivery information, visit our website at *www.usps.com®*.

OFFICIAL USE

Certified Mail Fee
$

Extra Services & Fees *(check box, add fee as appropriate)*
- ☐ Return Receipt (hardcopy) $
- ☐ Return Receipt (electronic) $
- ☐ Certified Mail Restricted Delivery $
- ☐ Adult Signature Required $
- ☐ Adult Signature Restricted Delivery $

Postage
$

Total Postage and Fees
$

1/17/2025

Postmark Here

206 NE 6TH
(REAR) Notice

Sent To Carrie Christine Loya
Street and Apt. No., or PO Box No. 711 N. Aylesford St.
City, State, ZIP+4® Big Spring, TX 79720

PS Form 3800, January 2023 PSN 7530-02-000-9047 See Reverse for Instructions

9589 0710 5270 2278 6320 27

U.S. Postal Service™
CERTIFIED MAIL® RECEIPT
Domestic Mail Only

For delivery information, visit our website at *www.usps.com®*.

OFFICIAL USE

Certified Mail Fee
$

Extra Services & Fees *(check box, add fee as appropriate)*
- ☐ Return Receipt (hardcopy) $
- ☐ Return Receipt (electronic) $
- ☐ Certified Mail Restricted Delivery $
- ☐ Adult Signature Required $
- ☐ Adult Signature Restricted Delivery $

Postage
$

Total Postage and Fees
$

1/17/2025

Postmark Here

206 NE 6TH
(REAR) Notice

Sent To Manuel Franco Reyes and Carrie
Street and Apt. No., or PO Box No. Christine Loya 206 NE 10th St.
City, State, ZIP+4® Big Spring, TX 79720

PS Form 3800, January 2023 PSN 7530-02-000-9047 See Reverse for Instructions

9589 0710 5270 2278 6320 10

U.S. Postal Service™
CERTIFIED MAIL® RECEIPT
Domestic Mail Only

For delivery information, visit our website at *www.usps.com®*.

OFFICIAL USE

Certified Mail Fee
$

Extra Services & Fees *(check box, add fee as appropriate)*
- ☐ Return Receipt (hardcopy) $
- ☐ Return Receipt (electronic) $
- ☐ Certified Mail Restricted Delivery $
- ☐ Adult Signature Required $
- ☐ Adult Signature Restricted Delivery $

Postage
$

Total Postage and Fees
$

1/17/2025

Postmark Here

206 NE 6TH
(REAR) Notice

Sent To Lupe Reyes and Manuel Reyes and
Street and Apt. No., or PO Box No. Carrie Christine Loya and Betty Pottegrew
City, State, ZIP+4® 206 NE 6TH (Rear) Big Spring, TX 79720

PS Form 3800, January 2023 PSN 7530-02-000-9047 See Reverse for Instructions

9589 0710 5270 2278 6320 03

U.S. Postal Service™
CERTIFIED MAIL® RECEIPT
Domestic Mail Only

For delivery information, visit our website at *www.usps.com®*.

OFFICIAL USE

Certified Mail Fee
$

Extra Services & Fees *(check box, add fee as appropriate)*
- ☐ Return Receipt (hardcopy) $
- ☐ Return Receipt (electronic) $
- ☐ Certified Mail Restricted Delivery $
- ☐ Adult Signature Required $
- ☐ Adult Signature Restricted Delivery $

Postage
$

Total Postage and Fees
$

1/17/2025

Postmark Here

206 NE 6TH
(REAR) Notice

Sent To Lupe Reyes & Manuel Reyes
Street and Apt. No., or PO Box No. P.O. Box 1861
City, State, ZIP+4® Big Spring, TX 79720

PS Form 3800, January 2023 PSN 7530-02-000-9047 See Reverse for Instructions

ALERT: WINTER STORMS IN THE SOUTHERN, SOUTHEAST, AND NORTHEAST AND WILDFIRE...

USPS Tracking®

FAQs >

Remove X

Tracking Number:

9589071052702278632041

Copy Add to Informed Delivery (https://informeddelivery.usps.com/)

Latest Update

Your item was returned to the sender on January 21, 2025 at 11:18 am in SAN ANTONIO, TX 78216 because of an incomplete address.

Get More Out of USPS Tracking:

USPS Tracking Plus®

Feedback

Alert

Insufficient Address

SAN ANTONIO, TX 78216
January 21, 2025, 11:18 am

In Transit to Next Facility

January 20, 2025

See All Tracking History

What Do USPS Tracking Statuses Mean? (https://faq.usps.com/s/article/Where-is-my-package)

Text & Email Updates

USPS Tracking Plus®

Product Information

See Less ^

Remove X

Tracking Number:

9589071052702278632034

Copy Add to Informed Delivery (https://informeddelivery.usps.com/)

Latest Update

This is a reminder to arrange for redelivery of your item or your item will be returned to sender.

Get More Out of USPS Tracking:

USPS Tracking Plus®

Delivery Attempt
Reminder to Schedule Redelivery of your item
January 23, 2025

Notice Left (No Authorized Recipient Available)
BIG SPRING, TX 79720
January 18, 2025, 1:42 pm

See All Tracking History

What Do USPS Tracking Statuses Mean? (https://faq.usps.com/s/article/Where-is-my-package)

See More ∨

Remove X

Tracking Number:

9589071052702278632027

Copy Add to Informed Delivery (https://informeddelivery.usps.com/)

Latest Update

Your item was picked up at a postal facility at 8:05 am on January 24, 2025 in BIG SPRING, TX 79720.

Get More Out of USPS Tracking:

USPS Tracking Plus®

Delivered

Delivered, Individual Picked Up at Postal Facility

BIG SPRING, TX 79720
January 24, 2025, 8:05 am

See All Tracking History

What Do USPS Tracking Statuses Mean? (https://faq.usps.com/s/article/Where-is-my-package)

See More

Remove ✕

Tracking Number:

9589071052702278632010

Copy Add to Informed Delivery (https://informeddelivery.usps.com/)

Latest Update

Your item was returned to the sender on January 18, 2025 at 12:28 pm in BIG SPRING, TX 79720 because of an incorrect address.

Get More Out of USPS Tracking:

USPS Tracking Plus®

Alert

No Such Number

BIG SPRING, TX 79720
January 18, 2025, 12:28 pm

Arrived at USPS Regional Facility

MIDLAND TX DISTRIBUTION CENTER
January 17, 2025, 10:03 pm

What Do USPS Tracking Statuses Mean? (https://faq.usps.com/s/article/Where-is-my-package)

See More

Remove ✕

Tracking Number:

9589071052702278632003

Copy Add to Informed Delivery (https://informeddelivery.usps.com/)

Latest Update

Your item was picked up at a postal facility at 8:05 am on January 24, 2025 in BIG SPRING, TX 79720.

Get More Out of USPS Tracking:

USPS Tracking Plus®

Delivered

Delivered, Individual Picked Up at Postal Facility

BIG SPRING, TX 79720
January 24, 2025, 8:05 am

See All Tracking History

What Do USPS Tracking Statuses Mean? (https://faq.usps.com/s/article/Where-is-my-package)

See More

Track Another Package

Enter tracking or barcode numbers

Need More Help?

Contact USPS Tracking support for further assistance.

FAQs

STATE OF TEXAS §
§
COUNTY OF HOWARD §

CERTIFICATION
OF POSTING OF PUBLIC HEARING

"The Hearing Board of the City of Big Spring, Texas notice of Public Hearing scheduled for January 28, 2025, attached as **Exhibit A-6**, was posted on or near the front door of each dwelling unit listed in the attached notice on January 17, 2025."

SIGNED on the 22 day of January, 2025.

Stant
AFFIANT

SWORN TO AND SUBSCRIBED before me this 22nd day of January, 2025 by the above referenced Affiant.

Stephanie K. Arita
Notary Public, State of Texas

STEPHANIE KEMUNTO ARITA
Notary ID #135144341
My Commission Expires
October 28, 2028

Exhibit A-6

BIG SPRING
TEXAS

Code Enforcement

217 E 3rd St., Big Spring, Texas 79720 · Ph. 432-264-2505

NOTICE OF PUBLIC HEARING
CONCERNING PUBLIC NUISANCE

NOTICE IS HEREBY GIVEN THAT THE BIG SPRING HEARING BOARD WILL HOLD A PUBLIC HEARING ON **JANUARY 28TH, 2025,** AT **5:30 P.M.**, IN THE CITY OF BIG SPRING COUNCIL CHAMBERS AT 307 E 4th ST., BIG SPRING, TEXAS 79720 TO CONSIDER ABATEMENT OF PUBLIC NUISANCES ON PROPERTIES IN THE CITY OF BIG SPRING, HOWARD COUNTY, TEXAS. ALL INTERESTED PERSONS MAY SPEAK, THEN A DETERMINATION WILL BE MADE AND REMEDIAL ACTION ORDERED ON THE FOLLOWING PROPERTIES:

206 NE 6TH (REAR) – LEGAL DESCRIPTION: SECTION 42, BLOCK 32, TOWNSHIP 1 NORTH, TRACT 38, WILLIAM B CURRIE SUBDIVISION – OWNER: LUPE REYES & MANUEL REYES

THE CITY OF BIG SPRING HEARING BOARD MEETING IS AVAILABLE TO ALL PERSONS REGARDLESS OF DISABILITY. IF YOU REQUIRE SPECIAL ASSISTANCE, PLEASE CONTACT TAMI DAVIS AT 432-264-2513 OR AT 310 NOLAN, BIG SPRING, TEXAS 79720, AT LEAST FORTY-EIGHT (48) HOURS IN ADVANCE OF THE MEETING.

Nick Reyna
Nick Reyna, Building Official, City of Big Spring

January 17, 2025 1:53 PM

STATE OF TEXAS :
COUNTY OF HOWARD :
CITY OF BIG SPRING :

The City Council of the City of Big Spring, Texas, met in a REGULAR AGENDA in the City Council Chambers located at 307 E. 4th St., Big Spring, Texas, at 5:30 PM, January 14, 2025, with the following members present in person:

MAYOR ROBERT MOORE
COUNCIL MEMBER NICK ORNELAS
COUNCIL MEMBER DIANE YANEZ
COUNCIL MEMBER CODY HUGHES
COUNCIL MEMBER HOMER WILKERSON
MAYOR PRO TEM TROY TOMPKINS
COUNCIL MEMBER DANIEL MORENO

Same and constituting a quorum, for which four Council Members must be present; and the following staff in person;

TODD DARDEN	City Manager
JOHN MEDINA	Assistant City Manager
ANDREW HAGEN	City Attorney
SHANE BOWLES	Public Works Director
JAY HOLT	Fire Chief
SANDY SMITH	Finance Director
SUSAN HIMES	Community Services Director
TAMI DAVIS	City Secretary
MANDY HAYNES	Municipal Judge

Open Session

Call to Order
Mayor Moore called the City Council meeting to order at 5:30 p.m.

Invocation
Mayor Moore gave the invocation.

Pledge of Allegiance to the United States Flag and to the Texas State Flag
Mayor Moore led the Pledge of Allegiance to the United States Flag and to the Texas State Flag.

Public Comment

Public Comment

A few citizens spoke on behalf of the West Texas Community Mediation Center regarding a misunderstanding on the use of the building and indicated that they have no intention of moving or leasing the building to anyone else.

Announcements, Presentations and Public Hearings

Open Presentation and Public Hearing

MOTION WAS MADE BY Mayor Moore to open the below listed presentation and public hearing, seconded by Council Member Yanez.

YEAS: Mayor Moore, Council Member Ornelas, Council Member Yanez, Council Member Hughes, Council Member Wilkerson, Mayor Pro Tem Tompkins, Council Member Moreno **7**

NAYS: None **0**

MOTION PASSED

Presentation Regarding a Proposed Big Spring Lofts Project for Affordable Senior Housing Rentals

Michael Beard, a representative with Gyani Capital, presented a power point presentation for an apartment complex for senior citizens.

PUBLIC HEARING - Consideration and Possible Action Concerning Abatement of Public Nuisance, at 805 E 18TH, BIG SPRING, TEXAS 79720 – LEGAL DESCRIPTION: THE EAST 41 FEET OF THE WEST 47 FEET OF BLOCK NO. 2, MANNING ADDITION, BIG SPRING, HOWARD COUNTY, TEXAS – OWNER: JESSE DARIO VARGAS

MOTION WAS MADE BY Council Member Hughes to abate the above captioned property (805 E. 18th), seconded by Council Member Wilkerson.

YEAS: Mayor Moore, Council Member Ornelas, Council Member Yanez, Council Member Hughes, Council Member Wilkerson, Mayor Pro Tem Tompkins, Council Member Moreno **7**

NAYS: None **0**

MOTION PASSED

Close Presentation and Public Hearing

MOTION WAS MADE BY Mayor Moore to close the above captioned presentation and public hearing, seconded by Council Member Hughes.

YEAS: Mayor Moore, Council Member Ornelas, Council Member Yanez, Council Member Hughes, Council Member Wilkerson, Mayor Pro Tem Tompkins, Council Member Moreno **7**

NAYS: None **0**

MOTION PASSED

City Manager's Report

City Manager's report on the following items:

- Update - Large Item Pickup, District 6
- Large Item Pickup, District 1 - January 15, 2025
- Summit Meeting - January 15, 2025 @ 1:30
- Chamber of Commerce Banquet - January 30, 2025
- Howard County Day at the Capital - February 5 & 6, 2025
- City Holidays - Martin Luther King- January 20, 2025

Todd Darden, City Manager, reported on the above captioned items as follows: Large item pickup for District 6 picked up 7 tons of items; Large item pickup for District 1 will be on January 15, 2025; Summit meeting for Howard County will be Wednesday, January 15, 2025 at 1:30 p.m.; Chamber of Commerce Banquet will be on January 30, 2025; Howard County Day at the Capital will be on February 5&6, 2025 and several staff will be attending; and city offices will be closed on January 20, 2025 in observance of Martin Luther King.

Consent Items

Approval of the City Council Minutes of the Regular Meeting of December 10, 2024 and the Second Regular Meeting of December 10, 2024.

Acknowledge Receipt of the Big Spring Economic Development Corporation Board of Directors Minutes for the Regular Meeting of November 19, 2024.

MOTION WAS MADE BY Council Member Hughes to approve the above captioned minutes, seconded by Council Member Yanez.

YEAS: Mayor Moore, Council Member Ornelas, Council Member Yanez, Council Member Hughes, Council Member Wilkerson, Mayor Pro Tem Tompkins, Council Member Moreno **7**

NAYS: None **0**

MOTION PASSED

Vouchers

Vouchers for 12/13/24	$	1,179,991.20
Vouchers for 12/20/24	$	533,199.79

Council Member Moreno reviewed the above captioned vouchers.

MOTION WAS MADE BY Council Member Moreno to approve the above captioned vouchers, seconded by Council Member Yanez.

YEAS: Mayor Moore, Council Member Ornelas, Council Member Yanez, Council Member Hughes, Council Member Wilkerson, Mayor Pro Tem Tompkins, Council Member Moreno **7**

NAYS: None **0**

MOTION PASSED

Vouchers for 01/03/24 $ 583,929.23
Vouchers for 01/10/24 $ 1,005,190.55

Council Member Ornelas reviewed the above captioned vouchers.

MOTION WAS MADE BY Council Member Ornelas to approve the above captioned vouchers, seconded by Council Member Yanez.

YEAS: Mayor Moore, Council Member Ornelas, Council Member Yanez, Council Member Hughes, Council Member Wilkerson, Mayor Pro Tem Tompkins, Council Member Moreno **7**

NAYS: None **0**

MOTION PASSED

Bids

Consideration and Possible Action on Awarding a Bid for a 72" Flail Mower for the Street Department and Authorizing the City Manager or His Designee to Execute any Necessary Documents.

MOTION WAS MADE BY Council Member Hughes to award the above captioned bid to South Plains Implement in the amount of $9,397.20, seconded by Council Member Wilkerson.

YEAS: Mayor Moore, Council Member Ornelas, Council Member Yanez, Council Member Hughes, Council Member Wilkerson, Mayor Pro Tem Tompkins, Council Member Moreno **7**

NAYS: None **0**

MOTION PASSED

Consideration and Possible Action on Awarding a Vertical Turbine Pump for the Roy Anderson Sports Complex and Authorizing the City Manager or His Designee to Execute any Necessary Documents

MOTION WAS MADE BY Council Member Ornelas to award the above captioned bid to JCH in the amount of $60,240.00, seconded by Council Member Yanez.

YEAS: Mayor Moore, Council Member Ornelas, Council Member Yanez, Council Member Hughes, Council Member Wilkerson, Mayor Pro Tem Tompkins, Council Member Moreno **7**

NAYS: None **0**

MOTION PASSED

Consideration and Possible Action on Awarding a Set of Submersible Mixers and Blowers for the Edward Ground Storage Tanks and Authorizing the City Manager or His Designee to Execute any Necessary Documents

MOTION WAS MADE BY Council Member Hughes to award the above captioned

bid to KASCO Equipment in the amount of $89,460.00, seconded by Council Member Wilkerson.

YEAS: Mayor Moore, Council Member Ornelas, Council Member Yanez, Council Member Hughes, Council Member Wilkerson, Mayor Pro Tem Tompkins, Council Member Moreno **7**

NAYS: None **0**

MOTION PASSED

New Business

First Reading of a Resolution Supporting the Proposed Project for the Texas Department of Housing and Community Affairs for 2025 Competitive 9% Housing Tax Credit for the Big Spring Lofts Project; and Providing an Effective Date

MOTION WAS MADE BY Council Member Hughes to approve the above captioned resolution, seconded by Mayor Pro Tem Tompkins.

YEAS: Mayor Moore, Council Member Ornelas, Council Member Yanez, Council Member Hughes, Council Member Wilkerson, Mayor Pro Tem Tompkins, Council Member Moreno **7**

NAYS: None **0**

MOTION PASSED

First Reading of a Resolution Granting the Consent of the City of Big Spring, Texas, to the Creation of Howard County Emergency Services District No. 1; Providing for the Repeal of Conflicting Legislation; Providing for Severability; Finding and Determining that the Meetings at Which the Resolution were Discussed were Open to the Public as Required by Law; and Establishing an Effective Date.

MOTION WAS MADE BY Council Member Hughes to approve the above captioned resolution, seconded by Council Member Yanez.

YEAS: Mayor Moore, Council Member Ornelas, Council Member Yanez, Council Member Hughes, Council Member Wilkerson, Mayor Pro Tem Tompkins, Council Member Moreno **7**

NAYS: None **0**

MOTION PASSED

First Reading of a Resolution Amending the Authorized Representatives Empowered to Transmit and Withdraw Funds from TexStar; and Providing an Effective Date

MOTION WAS MADE BY Council Member Hughes to approve the above captioned resolution, seconded by Council Member Ornelas.

YEAS: Mayor Moore, Council Member Ornelas, Council Member Yanez, Council Member Hughes, Council Member Wilkerson, Mayor Pro Tem Tompkins, Council Member Moreno **7**

NAYS: None **0**

MOTION PASSED

First Reading of an Ordinance Amending Chapter 38 of the Big Spring City Code "Administration," Article II "City Council," By Repealing Section 38-9 "Curfew for Minors"; Providing for Severability; and Providing for an Effective Date

MOTION WAS MADE BY Council Member Hughes to approve the above captioned ordinance, seconded by Council Member Yanez.

YEAS: Mayor Moore, Council Member Ornelas, Council Member Yanez, Council Member Hughes, Council Member Wilkerson, Mayor Pro Tem Tompkins, Council Member Moreno **7**

NAYS: None **0**

MOTION PASSED

Consideration and Possible Action to Approve a Pavement Management Study at McMahon-Wrinkle Airport and Authorizing the City Manager or his Designee to Execute any Necessary Documents

MOTION WAS MADE BY Mayor Moore to approve the above captioned study, seconded by Council Member Yanez.

YEAS: Mayor Moore, Council Member Ornelas, Council Member Yanez, Council Member Hughes, Council Member Wilkerson, Mayor Pro Tem Tompkins, Council Member Moreno **7**

NAYS: None **0**

MOTION PASSED

First Reading of an Ordinance Amending Ordinance Number 028-2024 Which Adopted the Annual Budget for the City of Big Spring, Texas for the Fiscal Year Beginning October 1, 2024 and Ending September 30 2025 by Increasing the Airpark Fund for the Purpose of Conducting an Airfield Pavement Study; Providing for Severability; Providing for Publication; and Providing an Effective Date.

MOTION WAS MADE BY Council Member Yanez to approve the above captioned ordinance, seconded by Council Member Hughes.

YEAS: Mayor Moore, Council Member Ornelas, Council Member Yanez, Council Member Hughes, Council Member Wilkerson, Mayor Pro Tem Tompkins, Council Member Moreno **7**

NAYS: None **0**

MOTION PASSED

Acknowledge Receipt of the Quarterly Claims and Litigation Report from the City Attorney

City Council acknowledged the above captioned report. No action necessary at this time.

Acknowledge Receipt of the Quarterly Financial Report and the Investment Report for the Quarter Ending September 30, 2024.

City Council acknowledged the above captioned report. No action necessary at this time.

Consideration and Possible Action to Approve an Amendment to that Certain Oil & Gas Lease Dated March 9, 2017, Between the City of Big Spring and Four Sevens Operating Co. Ltd. by Authorizing the City Manager to Execute the Amendment to Oil & Gas Lease Between the City of Big Spring and SOGC, LLC, and Any Necessary Documents.

MOTION WAS MADE BY Council Member Hughes to approve the above captioned amendment, seconded by Council Member Wilkerson.

YEAS: Mayor Moore, Council Member Ornelas, Council Member Yanez, Council Member Hughes, Council Member Wilkerson, Mayor Pro Tem Tompkins, Council Member Moreno **7**

NAYS: None **0**

MOTION PASSED

Consideration and Possible Action to Approve an Architectural/Engineering Agreement with Jacob Martin and Authorizing the City Manager or His Designee to Execute any Necessary Documents

MOTION WAS MADE BY Council Member Hughes to approve the above captioned agreement, seconded by Council Member Yanez .

YEAS: Mayor Moore, Council Member Ornelas, Council Member Yanez, Council Member Hughes, Council Member Wilkerson, Mayor Pro Tem Tompkins, Council Member Moreno **7**

NAYS: None **0**

MOTION PASSED

Boards & Committees

Consideration and Possible Action on the Below Listed Board:

McMahon/Wrinkle Aviation Advisory Board

Appoint John Scott Nominated by Council Member Hughes - Dist. 3

After a brief discussion, it was decided that John Scott is currently serving on the Big Spring Housing Authority Board and cannot serve on more than one board at a time. No action taken at this time.

Planning & Zoning Commission

Consideration of Terry McDaniel's Resignation

MOTION WAS MADE BY Mayor Moore to accept Terry McDaniel's resignation from the Planning & Zoning Commission, seconded by Council Member Yanez.

YEAS: Mayor Moore, Council Member Ornelas, Council Member Yanez, Council Member Hughes, Council Member Wilkerson, Mayor Pro Tem Tompkins, Council Member Moreno **7**

NAYS: None **0**

MOTION PASSED

Big Spring Economic Development Board

Consideration of Joel De La Garza Resignation
Appoint Terry McDaniel - Nominated by Mayor Moore

MOTION WAS MADE BY Mayor Moore to accept Joel De La Garza's resignation from the Big Spring Economic Development Board, seconded by Council Member Wilkerson.

YEAS: Mayor Moore, Council Member Ornelas, Council Member Yanez, Council Member Hughes, Council Member Wilkerson, Mayor Pro Tem Tompkins, Council Member Moreno **7**
NAYS: None **0**
MOTION PASSED

MOTION WAS MADE BY Mayor Moore to appoint Terry McDaniel to the Big Spring Economic Development Board, seconded by Council Member Diane Yanez.

YEAS: Mayor Moore, Council Member Ornelas, Council Member Yanez, Council Member Hughes, Council Member Wilkerson, Mayor Pro Tem Tompkins, Council Member Moreno **7**
NAYS: None **0**
MOTION PASSED

Council Input

Input
Council Member Ornelas wanted to clarify a statement that was made at the last Big Spring Economic Development Board meeting regarding his decision on the recent budget amendment request from the Big Spring Economic Develpment Corporation by stating that there were more than two business men on the city council and that he does understand budgets.

Adjourn
Mayor Moore adjourned the city council meeting at 6:56 p.m.

Robert H. Moore III, Mayor

ATTEST:

Tami L. Davis, City Secretary

McMahon-Wrinkle Aviation Advisory Board Meeting Minutes
October 17, 2024

The McMahon-Wrinkle Aviation Advisory Board met in Regular Session at 5:30 p.m., on Thursday, October 17, 2024 at the Airport Terminal conference room, 3200 Rickabaugh Drive, Big Spring, Texas. Steven Boatenhamer called the meeting to order at 5:30 p.m. with the following members in attendance:

Shane Schaffner Jonathan Ray

Steven Boatenhamer Russ Rutledge

Also in attendance: Mike Feeley Andriana Olvera Scott Emerson

Absent: Bob Miller Adriel Saldivar

Item # 1
Call to Order
Steven Boatenhamer called the meeting to order at 5:30 p.m.

Item # 2
Review and approve minutes from August 15, 2024 meeting.
Motion to approve made by Jonathan Ray seconded by Shane Schaffner with all members voting "aye" for acceptance of the minutes as written.

Item # 3
Public Comment
There were no public comments at this time.

Item # 4
Airport Director's Report
Mike briefly updated the board on the several projects waiting to take place. The control tower and Ryder trucking building have been awarded by the city council and will soon be demolished. The new Training facility that was previously the golf pro shop is set to begin as well. The Dora Roberts Rehabilitation Center has donated all of their exercise equipment as well as $165,000 for new flooring for the new facility. A budget of $200,000 has been budgeted to complete the renovation. The facility will be used for police and fire staff. The agreement for abatement is currently in the city attorney's office waiting to be executed so that renovations can begin. Mike then began to explain the efforts to clean up the west side of the Airpark for future development. Part of this development is the elevated water tower. The project will take approximately 18 months to complete. Lastly Mike gave an update on the Hangar 25 door project. The security for

the project has been extended for a cost of $46,000. The security is for after hours and 24 hours on weekends.

Item # 5
Next Meeting Date is November 21, 2024

Adjournment: 7:00 P.M.

Approved by Steven Boatenhamer, Chairman

21 NOV 24
Date

McMahon-Wrinkle Aviation Advisory Board Meeting Minutes
November 21, 2024

The McMahon-Wrinkle Aviation Advisory Board met in Regular Session at 5:30 p.m., on Thursday, November 21, 2024 at the Airport Terminal conference room, 3200 Rickabaugh Drive, Big Spring, Texas. Steven Boatenhamer called the meeting to order at 5:30 p.m. with the following members in attendance:

Steven Boatenhamer Russ Rutledge Robert Miller Jonathan Ray

Also in attendance: Mike Feeley Andriana Olvera Mark Willis

Absent: Shane Schaffner Adriel Saldivar

Item # 1
Call to Order
Steven Boatenhamer called the meeting to order at 5:30 p.m.

Item # 2
Review and approve minutes from October 17, 2024 meeting.
Motion to approve made by Jonathan Ray seconded by Shane Schaffner with all members voting "aye" for acceptance of the minutes as written.

Item # 3
Public Comment
There were no public comments at this time.

Item # 4
Airport Director's Report
Mike began updating the board on the proposed Vietnam Memorial relocation. The new location will be next door just north of Hangar 25 Air Museum. The Vietnam Memorial board will present it to the City in hopes to get funding for the project. There is no budget set currently. Next on the agenda is the Hangar 25 door project. Everything has been completed except for the installation of the door panels and the electrical. Security is needed 24/7 until the panels are installed. There is currently no completion date. Mike also mentioned that $70,000 was budgeted to replace two HVAC systems at Hangar 25. Mike also intends to issue a 10-year with two 5-year options contract. The current contract in place has expired. This contract will also include a loan agreement for the aircraft that is owned by the City and the right to audit at any time. The City is responsible for maintaining the building and all aircraft purchased by the City. Next discussed was an update of the fuel truck covered parking. The project was awarded to R.W. The carport will be used for fuel trucks, tow tractor and golf cart. The gold cart will be used to pick

up pilots and passengers for the self-serve fueling station. The striping and marking project was next on the agenda to be discussed. This project will include renaming of the runways and taxiways as well as replacing guidance signs. During this project Runway 17/35 will close for seven days but the crosswind runway 6/24 will remain open. Mike then briefly mentioned that GEO will possibly be reopening their facilities which will bring approximately 400 hundred jobs. The plan is to transport inmates by aircraft. Mike is working on getting a pavement assessment to insure the weight capability. Lastly, an update on the elevated water tower. The foundation has been completed and the tower will go up in May of 2025.

Item # 5
Next Meeting Date is January 16, 2025

Adjournment: 7:00 P.M.

Approved by Steven Boatenhamer, Chairman

16 JAN 25
Date

RESOLUTION NO. _____

A RESOLUTION OF THE CITY COUNCIL OF THE CITY OF BIG SPRING, TEXAS SUPPORTING THE PROPOSED PROJECT FOR THE TEXAS DEPARTMENT OF HOUSING AND COMMUNITY AFFAIRS FOR 2025 COMPETITIVE 9% HOUSING TAX CREDITS FOR THE BIG SPRING LOFTS PROJECT; AND PROVIDING AN EFFECTIVE DATE

WHEREAS, Big Spring Lofts LLC has proposed a development for affordable Senior (55+) rental housing at approx.. NWC of Sunset Ave. & Birdwell Lane named Big Spring Lofts in the City of Big Spring, Howard County; and

WHEREAS, Big Spring Lofts LLC has communicated that it intends to submit an application to the Texas Department of Housing and Community Affairs for 2025 Competitive 9% Housing Tax Credits for Big Spring Lofts;

NOW, THEREFORE, BE IT RESOLVED BY THE CITY COUNCIL OF THE CITY OF BIG SPRING, TEXAS, AS FOLLOWS, THAT:

SECTION 1. The City of Big Spring, acting through its governing body, hereby confirms that it supports the proposed Big Spring Lofts located at approximately NWC of Sunset Avenue & Birdwell Lane and that this formal action has been taken to put on record the opinion expressed by the City of Big Spring on January 28, 2025.

SECTION 2. The City of Big Spring, acting through its governing body, hereby confirms that, upon successful award of 2025 Competitive 9% Housing Tax Credits, the city commits to providing reduced fees or a contribution of other value that equals a minimum of $250.00 for the benefit of Big Spring Lofts.

SECTION 3. On behalf of the Governing Body the City Manager is hereby authorized, empowered, and directed to certify these resolutions to the Texas Department of Housing and Community Affairs.

SECTION 4. This Resolution shall become effective immediately upon its second passage.

PASSED AND APPROVED on first reading at a regular meeting of the City Council on the ___ day of _____, _____ with all members of the Council present voting "aye" for the passage of same.

PASSED AND APPROVED on second and final reading at a regular meeting of the City Council on the _ day of _____, _____ with all members of the Council present voting "aye" for the passage of same.

_____
Robert H. Moore, III, Mayor

ATTEST:

_____
Tami L. Davis, City Secretary

RESOLUTION NO. _____

A RESOLUTION OF THE CITY COUNCIL OF THE CITY OF BIG SPRING, TEXAS GRANTING THE CONSENT OF THE CITY OF BIG SPRING, TEXAS, TO THE CREATION OF HOWARD COUNTY EMERGENCY SERVICES DISTRICT NO. 1; PROVIDING FOR THE REPEAL OF CONFLICTING LEGISLATION; PROVIDING FOR SEVERABILITY; FINDING AND DETERMINING THAT THE MEETINGS AT WHICH THE RESOLUTION WERE DISCUSSED WERE OPEN TO THE PUBLIC AS REQUIRED BY LAW; AND ESTABLISHING AN EFFECTIVE DATE

WHEREAS, Tex. Const. Art. III, § 48-e authorizes the creation of an emergency service district; and

WHEREAS Tex. Health & Safety Code § 775.014 authorizes a governing body of a municipality to consent or to not consent to the inclusion of territory within the municipality's limits or extraterritorial jurisdiction in an emergency services district; and

WHEREAS, the City of Big Spring, Texas (the "*City*"), has received the petition attached as **Exhibit "A"**, and a letter requesting the City's consent to the creation of an emergency services district ("*District*"), proposed to be known as Howard County Emergency Services District No. 1, which includes the extraterritorial jurisdiction of the City within Howard County;

WHEREAS the City Council of Big Spring finds it in the public interest to make this resolution;

NOW, THEREFORE, BE IT RESOLVED BY THE CITY COUNCIL OF THE CITY OF BIG SPRING, TEXAS:

SECTION 1. The facts and matters set forth in the preamble of this Resolution are hereby found to be true and correct.

SECTION 2. The City hereby consents to the creation of the District, proposed to be known as Howard County Emergency Services District No. 1, and to the inclusion of the extraterritorial jurisdiction of the City within the boundaries of the District as more particularly described in the petition attached as **Exhibit A**. This consent is valid for a period of six months from the date of its adoption unless City Council takes action to supersede this Resolution.

SECTION 3. All resolutions or parts of resolutions and minute orders in conflict herewith are hereby repealed to the extent of the conflict.

SECTION 4. Should any one or more sections or clauses of this Resolution be adjudged unconstitutional or invalid, such judgment shall not affect, impair, or invalidate the remaining provisions of this Resolution, and the remaining provisions of the Resolution shall be interpreted as if the offending section or clause never existed.

SECTION 5. It is hereby officially found and determined that the meetings at which this Resolution was adopted were open to the public and that public notice of the time, place and purpose of said meetings were given as required by law.

SECTION 6. This Resolution shall become effective immediately.

SECTION 7. This Resolution shall be construed and enforced in accordance with the laws of the State of Texas and of the United States of America.

PASSED AND APPROVED on first reading at a regular meeting of the City Council on the _____ day of _____, **2025** with all members of the Council voting "aye" for the passage of same.

PASSED AND APPROVED on second and final reading at a regular meeting of the City Council on the _____ day of _____, **2025** with all members of the Council voting "aye" for the passage of same.

_____
Robert H. Moore III, Mayor

ATTEST:

_____
Tami L. Davis, City Secretary

PETITION FOR CREATION OF
EMERGENCY SERVICES DISTRICT

THE STATE OF TEXAS	§	IN THE COMMISSIONER'S COURT
	§	
	§	OF
	§	
COUNTY OF HOWARD	§	HOWARD COUNTY, TEXAS

TO THE HONORABLE COUNTY JUDGE AND COMMISSIONERS OF SAID COURT:

NOW COME 100 or more qualified voters who own taxable real property in Howard County, Texas pursuant to Texas Health & Safety Code, Section 775.011, requesting the creation of an Emergency Services District and would respectfully show the following:

I.

That the proposed Howard County Emergency Services District No. 1 (the "District") will be created and operated under the provisions of Article III, Section 48-e of the Constitution of Texas and Chapter 775 of the Health & Safety Code of the State of Texas.

II.

That the name of the proposed District shall be "HOWARD COUNTY EMERGENCY SERVICES DISTRICT NO. 1"

III.

That the area of the District does not overlap the boundaries of any other emergency services district, and overlaps portions of the extraterritorial jurisdiction of the City of Big Spring, and will generally include all of the city limits and extraterritorial jurisdiction of the City of Coahoma, and all of the city limits and extraterritorial jurisdiction of the City of Forsan. The boundaries of the District are more particularly described by the description attached as **Exhibit "A"**, which is attached hereto and incorporated herein for all purposes, and generally shown on the attached sketch in **Exhibit "B"**.

IV.

The District will provide fire and rescue services in response to any emergency situation in accordance with the authority granted to emergency services districts under Chapter 775 of the Texas Health & Safety Code.

V.

The creation of the District complies with Section 775.0205 of the Texas Health & Safety Code.

That Eric Barber, who resides at 203 North Avenue Coahoma, Texas, 79511 and Kristen Partee, who resides at 2507 Driver Road Big Spring, Texas, 79720 (collectively, "Petitioners"), agree and obligate themselves to pay the cost incident to the formation of the District, including the costs of publishing notices, election costs, and other necessary and incidental expenses, such cost not to exceed one hundred fifty ($150.00) dollars, to Howard County as required by Section 775.013(b) of the Texas Health & Safety Code.

VI.

The cities of Big Spring, Coahoma, and Forsan are the only municipalities whose consent must be obtained under Section 775.014 of the Texas Health & Safety Code. The portions of city limits and extraterritorial jurisdictions of the cities of Coahoma and Forsan that are currently within Howard County will be within the territory of the new District and portions of the extraterritorial jurisdiction of the city of Big Spring located within Howard County.

VII.

The signatures required by the Texas Health & Safety Code, Section 775.011, for the creation of Howard County Emergency Services District No. 1 are attached on **Exhibit "C"**.

WHEREFORE, PREMISES CONSIDERED, Petitioners pray that such notices be issued by the County Clerk of Howard County as required by law; that a public hearing be held on this

petition in the county; and that, after the hearing, the Commissioners Court of Howard County grant this petition and call a special election regarding the creation of the District.

RESPECTFULLY SUBMITTED this _____ day of _____, 2024.

PETITIONERS:

By: _____
Printed Name: Kristin Parker

By: _____
Printed Name: Eric Barber

RESOLUTION NO._____

A RESOLUTION OF THE CITY COUNCIL OF THE CITY OF BIG SPRING, TEXAS, AMENDING THE AUTHORIZED REPRESENTATIVES EMPOWERED TO TRANSMIT AND WITHDRAW FUNDS FROM TexSTAR; AND PROVIDING AN EFFECTIVE DATE

WHEREAS, the City of Big Spring (the "Government Entity") by authority of the Application for Participation in TexSTAR (the "Application") has entered into an Interlocal Agreement (the "Agreement") and has become a participant in the public funds investment pool created thereunder known as TexSTAR Short Term Asset Reserve Fund "TexSTAR"); and

WHEREAS, the Application designated on one or more "Authorized Representatives" within the meaning of the Agreement; and

WHEREAS, the Government Entity now wishes to update and designate the following persons as the "Authorized Representatives" within the meaning of the Agreement;

NOW, THEREFORE, BE IT RESOLVED BY THE CITY COUNCIL OF THE CITY OF BIG SPRING TEXAS THAT:

SECTION 1. The following officers, officials or employees of the Government Entity specified in this document are hereby designated as "Authorized Representatives" within the meaning of the Agreement, with full power and authority to open accounts, to deposit and withdraw funds, to agree to the terms for use of the website for online transactions, to designate other authorized representatives, and to take all other action required or permitted by Government Entity under the Agreement created by the application, all in the name and on behalf of the Government Entity.

SECTION 2. This document supersedes and replaces the Government Entity's previous designation of officers, officials or employees of the Government Entity as Authorized Representatives under the Agreement.

SECTION 3. This resolution will continue in full force and effect until amended or revoked by Government Entity and written notice of the amendment or revocation is delivered to the TexSTAR Board.

SECTION 4. The terms used in this resolution have the meanings given to them by the Application.

SECTION 5. This resolution shall become effective immediately upon its final passage and shall supersede and replace any prior authorized Representative designation.

Authorized Representatives. Each of the following Participant officials is designated as Participant's Authorized Representative authorized to give notices and instructions to the Board in accordance with the Agreement, the Bylaws, the Investment Policy, and the Operating Procedures:

1. Name: Robert H. Moore III — Title: Mayor
   Signature:_____ — Phone: 432-264-2401
   Email: rmoore@mybigspring.com
2. Name: Sandra Smith — Title: Finance Director
   Signature:_____ — Phone: 432-264-2517
   Email: sgsmith@mybigspring.com
3. Name: Gary Givens — Title: Assistant Finance Director
   Signature:_____ — Phone: 432-264-2512
   Email: ggivens@mybigspring.com
4. Name: Tami L. Davis — Title: City Secretary
   Signature:_____ — Phone: 432-264-2513
   Email: tdavis@mybigspring.com

Primary Contact: List the name of the Authorized Representative listed above that will be designated as the Primary Contact and will receive all TexSTAR correspondence including transaction confirmations and monthly statements.

Name: Sandra Smith

Inquiry Only Contact: In addition, the following additional Participant representative (not listed above) is designated as an **Inquiry Only** Representative authorized to obtain account information:

Name:_____N/A_____ — Title:_____

Signature:_____ — Phone:_____

Email:_____

Participant may designate other authorized representatives by written instrument signed by an existing Participant Authorized Representative or Participant's chief executive officer.

PASSED AND APPROVED on first reading at a regular meeting of the City Council on the ___ _____ day of _____, 2025 with all members of the Council present voting "aye" for passage of same.

PASSED AND APPROVED on second and final reading at a regular meeting of the City Council on the _____ day of _____, 2025 with all members present voting "aye" for passage of same.

_____
Robert H. Moore III, Mayor

ATTEST:

_____
Tami L. Davis, City Secretary

ORDINANCE NO. _____

AN ORDINANCE OF THE CITY COUNCIL OF THE CITY OF BIG SPRING, TEXAS AMENDING CHAPTER 38 OF THE BIG SPRING CITY CODE "ADMINSTRATION," ARTICLE II "CITY COUNCIL," BY REPEALING SECTION 38-9 "CURFEW FOR MINORS"; PROVIDNG FOR SEVERABILITY; AND PROVIDING FOR AN EFFECTIVE DATE

WHEREAS, in 2023, the Texas Legislature enacted a repeal of statutes regulating juvenile curfew regulations, and furthermore enacted Section 370.007, Texas Local Government Code, prohibiting juvenile curfew orders, ordinances, or other measures, in HB 1819, regular session; and

WHEREAS, the City Council finds it necessary and proper to repeal this section of the Big Spring City Code;

NOW, THEREFORE, BE IT ORDAINED BY THE CITY COUNCIL OF THE CITY OF BIG SPRING, TEXAS, AS FOLLOWS, THAT:

SECTION 1. The Big Spring Code of Ordinances, Chapter 38 entitled ''Offenses and Miscellaneous Provisions," Article 1 entitled "In General," Section 38-9, entitled "Curfew for minors," is hereby repealed as follows:

Sec. 38-9 – ~~Curfew for minors.~~ Repealed.

~~(1) 11:00 p.m. on any Sunday, Monday, Tuesday, Wednesday, or Thursday until 6:00 a.m. of the following day; and~~

~~(2) 12:01 a.m. until 6:00 a.m. on any Friday or Saturday.~~

~~*Emergency* means an unforeseen combination of circumstances or the resulting state that calls for immediate action. The term "emergency" includes, but is not limited to, a fire, a natural disaster, an automobile accident, or any situation requiring immediate action to prevent serious bodily injury or loss of life.~~

~~*Establishment* means any privately owned place of business operated for a profit to which the public is invited, including but not limited to any place of amusement or entertainment.~~

~~*Guardian* means:~~

~~(1) A person who, under court order, is the guardian of the person of a minor; or~~

~~(2) A public or private agency with whom a minor has been placed by a court.~~

~~*Minor* means any person under 17 years of age.~~

~~*Operator* means any individual, firm, association, partnership, or corporation operating, managing, or conducting any establishment. The term "operator" includes the members or partners of an association or partnership and the officers of a corporation.~~

~~*Parent* means a person who is:~~

~~(1) A natural parent, adoptive parent, or stepparent of another person; or~~

~~(2) At least 18 years of age and authorized by a parent or guardian to have the care and custody of a minor.~~

~~*Public place* means any place to which the public or a substantial group of the public has access and includes, but is not limited to, streets, highways, and the common areas of schools, hospitals, apartment houses, office buildings, transport facilities and shops.~~

~~*Remain* means to:~~

~~(1) Linger or stay; or~~

~~(2) Fail to leave premises when requested to do so by a police officer or the owner, operator, or other person in control of the premises.~~

~~*Serious bodily injury* means bodily injury that creates a substantial risk of death or that causes death, serious permanent disfigurement, or protracted losses of impairment of the function of any bodily member or organ.~~

~~(b) *Offenses.*~~

~~(1) A minor commits an offense if he remains in any public place or on the premises of any establishment within the city during curfew hours.~~

~~(2) A parent or guardian of a minor commits an offense if he knowingly permits, or by insufficient control allows, the minor to remain in any public place or on the premises of any establishment within the city during curfew hours.~~

~~(3) The owner, operator, or any employee of an establishment commits an offense if he knowingly allows a minor to remain upon the premises of the establishment during curfew hours.~~

~~(c) *Defenses.*~~

~~(1) It is a defense to prosecution under subsection (b) of this section that the minor was:~~

~~a. Accompanied by the minor's parent or guardian:~~

~~b. On an errand at the direction of the minor's parent or guardian, without any detour or stop;~~

~~c. In a motor vehicle involved in interstate travel;~~

~~d. Engaged in an employment activity, or going to or returning home from an employment activity, without any detour or stop.~~

~~e. Involved in an emergency.~~

~~f. On the sidewalk abutting the minor's residence or abutting the residence of a next-door neighbor if the neighbor did not complain to the police department about the minor's presence;~~

~~g. Attending an official school, religious, or other recreational activity supervised by adults and sponsored by the city, a civic organization, or another similar entity that takes responsibility for the minor, or going to or returning home from, without any detour or stop, an official school, religious, or other recreational activity supervised by adults and sponsored by the city, a civic organization, or another similar entity that takes responsibility for the minor;~~

~~h. Exercising First Amendment rights protected by the United States constitution, such as the free exercise of religion, freedom of speech, and the right of assembly; or~~

~~i. Married or had been married or had disabilities of minority removed in accordance with Texas Family Code ch. 31.~~

~~(2) It is a defense to prosecution under subsection (b)(3) of this section that the owner, operator, or employee of an establishment promptly notified the police department that a minor was present on the premises of the establishment during curfew hours and refused to leave.~~

~~(d) *Enforcement.* Before taking any enforcement action under this section, a police officer shall ask the apparent offender's age and reason for being in the public place. The officer shall not issue a citation or make an arrest under this section unless the officer reasonably believes that an offense has occurred and that, based on any response and other circumstances, no defense in subsection (c) of this section is present.~~

~~(e) *Penalties.*~~

~~(1) A person who violates a provision of this section is guilty of a separate offense for each day or part of a day during which the violation is committed, continued, or permitted. Each offense, upon conviction, is punishable by a fine not to exceed $500.00.~~

~~(2) Reserved.~~

~~(f) *Extension of curfew ordinance.* The provisions of this section is hereby continued in effect until September 1, 2024.~~

NOTE: Language to be added appears <u>underlined</u> and language to be deleted is ~~stricken~~.

SECTION 2. Should any section, paragraph, sentence, clause, phrase or word of this ordinance be declared unconstitutional or invalid for any purpose, the remainder of this ordinance shall not be affected thereby.

SECTION 3. Any ordinances or parts of ordinances in the Big Spring Code of Ordinances in conflict with this ordinance shall be and are hereby repealed to the extent of such conflict.

SECTION 4. The City Secretary is hereby ordered and directed to cause the descriptive caption to be published as provided by law.

SECTION 5. This ordinance shall be in full force and effect from and after its passage and publication in accordance with the City of Big Spring Charter and other law.

PASSED AND APPROVED on first reading at a regular meeting of the City Council on the ___ day of _____**, 2025** with all members of the Council present voting "aye" for the passage of same.

PASSED AND APPROVED on the second and final reading at a regular meeting of the City Council on the _____ day of _____**,** 2025 with all members of the Council present voting "aye" for the passage of the same.

_____
Robert H. Moore III, Mayor

ATTEST:

_____
Tami L. Davis, City Secretary

ORDINANCE NO. _____

AN ORDINANCE OF THE CITY COUNCIL OF THE CITY OF BIG SPRING, TEXAS, AMENDING ORDINANCE NUMBER 028-2024 WHICH ADOPTED THE ANNUAL BUDGET FOR THE CITY OF BIG SPRING, TEXAS FOR THE FISCAL YEAR BEGINNING OCTOBER 1, 2024 AND ENDING SEPTEMBER 30, 2025 BY INCREASING THE AIRPARK FUND BUDGET FOR THE PURPOSE OF CONDUCTING AN AIRFIELD PAVEMENT STUDY; PROVIDING FOR SEVERABILITY; AND PROVIDING AN EFFECTIVE DATE.

WHEREAS the City Council adopted the annual 2024-25 budget for the City of Big Spring, Texas on September 24, 2024 ("Budget"); and

WHEREAS the City Manager and the Finance Director recommend that the City Council increase the Airpark Fund budgeted expenditures and amend the Budget previously approved;

NOW, THEREFORE, BE IT ORDAINED BY THE CITY COUNCIL OF THE CITY OF BIG SPRING, TEXAS, AS FOLLOWS THAT:

SECTION 1. The Airpark Fund Budget of the Annual Budget for the City of Big Spring, Texas for the Fiscal Year beginning October 1, 2024 and ending September 30, 2025 is hereby increased by the amount of $64,700.00 to account 410-021-610-6229-000, for the purpose of conducting an Airfield Pavement Study to determine the weight bearing capability of the runways and taxiways. The net increase will be funded through the fund balance.

SECTION 2. The remaining portions of Ordinance Number 028-2024 shall remain in full force and effect.

SECTION 3. Should any section, paragraph, sentence, clause, phrase or word of this ordinance be declared unconstitutional or invalid for any purpose, the reminder of this ordinance shall not be affected thereby.

SECTION 4. All ordinances or parts of ordinances in conflict herewith are hereby repealed to the extent of the conflict.

SECTION 5. This ordinance shall be in full force and effective after the second reading.

PASSED AND APPROVED on first reading at a regular meeting of the City Council on the _____ day of _____**, 2025** with all members of the Council present voting "aye" for the passage of same.

PASSED AND APPROVED on second and final reading at a second regular meeting of the City Council on the _____ day of_____**, 2025** with all members of the council present voting "aye" for the passage of same.

_____
Robert H. Moore III, Mayor

ATTEST:

_____
Tami L. Davis, City Secretary

INTEGRITY
EXCELLENCE
TRUST

January 23, 2025

Mr. John Medina
Assistant City Manager
City of Big Spring
310 Nolan Street
Big Spring, Texas 79720

Re: 2024 Water and Sewer Line Replacements
Letter of Recommendation for Award

Sent: Via Email

Dear Mr. Medina:

On January 15, 2025, the City of Big Spring received bids for the 2024 Water and Sewer Line Replacements project. Four bids were received for this project. A bid tabulation sheet summarizing the bids is included as an attachment to this letter. The lowest total base bid was $971,674.50 submitted by Starks Construction Co, Inc. out of Abilene, Texas. Jacob and Martin have evaluated the low bid for conformity with the advertisement for bids and checked the references of the low bidder. Based on our evaluation of the bids, it is recommended that the contract be awarded to Starks Construction for the total amount of $971,674.50. If the City Council agrees with the recommendation for the award, Jacob and Martin will prepare contract documents for execution by the Contractor and the City. Feel free to contact me if you have any questions.

Sincerely,

Kirt Harle, P.E.

JACOB | MARTIN

325.695.1070
817.594.9880
info@jacobmartin.com
www.jacobmartin.com
3465 Curry Lane
Abilene, TX 76906
1508 Santa Fe, Suite 203
Weatherford, TX 76086
TBPE Firm #: 2448 | TBAE Firm #: BR 2261 | TBPLS Firm #: 10024300 – Abilene | TBPLS Firm #: 10193992 - Weatherford

City of Big Spring
2024 Water and Sewer Line Replacements
Bid Date: January 15, 2025 at 3:00 PM
JM Project Number: 23342
Local Funding

JACOB MARTIN
Abilene, Texas

Bid Tabulation

Engineer: Jacob & Martin, LLC
Abilene, Texas

For all Labor, Materials, Equipment, and Incidentals to Furnish and Install the Following:

Item #	Item Description	Quantity	Unit	Bill Starks Construction Co, Inc. 3301 N. 3rd St., Suite 113 Abilene, TX 79603			Whitewater Construction, Inc. 6632 Old Mexia Rd. Waco, TX 76705		Lupe Rubio Construction Co, Inc. 981 Dilley St. Kingsland, TX 78639			Bo Simon, Inc. 25390 Storey St. Umbarger, TX 79091	
				Unit Price	Total		Unit Price	Total	Unit Price	Total		Unit Price	Total
	TOTAL BASE BID A (Items 1 - 30)				$ 971,674.50	*		$ 1,135,293.00		$ 1,263,908.59	*		$ 1,676,062.00

ADDITIVE ALTERNATE BID

Item #	Item Description	Quantity	Unit	Unit Price	Total		Unit Price	Total	Unit Price	Total		Unit Price	Total
	TOTAL ALTERNATE BID A (ITEMS A1-A9)				$ 348,470.00	*		$ 348,470.00		$ 314,311.15			$ 296,280.00

(*) - Extension Error

JM TBPE Firm # 2448
JM TBAE Firm # BR2261
JM TBPLS Firm # 10194493

City of Big Spring
2024 Water and Sewer Line Replacements
Bid Date: January 15, 2025 at 3:00 PM
JM Project Number: 23342
Local Funding

JACOB MARTIN
Abilene, Texas

Bid Tabulation

Engineer: Jacob & Martin, LLC
Abilene, Texas

For all Labor, Materials, Equipment, and Incidentals to Furnish and Install the Following:

Item #	Item Description	Quantity	Unit	Bill Starks Construction Co, Inc. 3301 N. 3rd St., Suite 113 Abilene, TX 79603			Whitewater Construction, Inc. 6632 Old Mexia Rd. Waco, TX 76705		Lupe Rubio Construction Co, Inc. 981 Dilley St. Kingsland, TX 78639		Bo Simon, Inc. 25390 Storey St. Umbarger, TX 79091	
				Unit Price	Total		Unit Price	Total	Unit Price	Total	Unit Price	Total
1	Mobilization, Bonding and Insurance	1	LS	$ 40,000.00	$ 40,000.00		$ 18,000.00	$ 18,000.00	$ 81,250.00	$ 81,250.00	$ 60,000.00	$ 60,000.00
2	10" DR18 C900 PVC Water Line	185	LF	$ 59.00	$ 10,915.00		$ 91.00	$ 16,835.00	$ 102.17	$ 18,901.45	$ 84.00	$ 15,540.00
3	6" DR18 C900 PVC Water Line	6,130	LF	$ 35.00	$ 214,550.00		$ 62.00	$ 380,060.00	$ 53.33	$ 326,912.90	$ 90.00	$ 551,700.00
4	4" DR18 C900 PVC Water Line	25	LF	$ 50.00	$ 1,250.00	*	$ 65.00	$ 1,625.00	$ 43.04	$ 1,076.00	$ 45.00	$ 1,125.00
5	2" SCH40 PVC Water Line	35	LF	$ 50.00	$ 1,750.00		$ 56.00	$ 1,960.00	$ 30.25	$ 1,058.75	$ 40.00	$ 1,400.00
6	10" Gate Valve and Box	2	EA	$ 6,500.00	$ 13,000.00		$ 5,200.00	$ 10,400.00	$ 4,338.75	$ 8,677.50	$ 4,500.00	$ 9,000.00
7	6" Gate Valve and Box	36	EA	$ 3,300.00	$ 118,800.00	*	$ 2,500.00	$ 90,000.00	$ 2,312.50	$ 83,250.00	$ 3,400.00	$ 122,400.00
8	10" Water Line Connection	2	EA	$ 5,500.00	$ 11,000.00		$ 4,300.00	$ 8,600.00	$ 5,695.00	$ 11,390.00	$ 5,500.00	$ 11,000.00
9	6" Water Line Connection	11	EA	$ 4,800.00	$ 52,800.00	*	$ 2,200.00	$ 24,200.00	$ 4,757.61	$ 52,333.71	$ 5,200.00	$ 57,200.00
10	4" Water Line Connection	8	EA	$ 2,500.00	$ 20,000.00		$ 1,900.00	$ 15,200.00	$ 4,195.63	$ 33,565.04	$ 4,100.00	$ 32,800.00
11	2" Water Line Connection	1	EA	$ 1,500.00	$ 1,500.00		$ 1,500.00	$ 1,500.00	$ 2,238.75	$ 2,238.75	$ 3,500.00	$ 3,500.00
12	16" Water Line Connection w/ 16" X 6" Tapping Sleeve and 6" Tapping Valve and Valve Box	1	EA	$ 7,500.00	$ 7,500.00		$ 4,900.00	$ 4,900.00	$ 10,843.75	$ 10,843.75	$ 8,600.00	$ 8,600.00
13	Reconnect Existing Fire Hydrant	5	EA	$ 2,800.00	$ 14,000.00		$ 5,000.00	$ 25,000.00	$ 5,655.55	$ 28,277.75	$ 2,500.00	$ 12,500.00
14	Relocate Existing Fire Hydrant	2	EA	$ 3,200.00	$ 6,400.00		$ 5,000.00	$ 10,000.00	$ 8,121.75	$ 16,243.50	$ 4,500.00	$ 9,000.00
15	Remove and Dispose Existing Valve Box	19	EA	$ 100.00	$ 1,900.00		$ 360.00	$ 6,840.00	$ 187.50	$ 3,562.50	$ 500.00	$ 9,500.00
16	Long Side Meter Reconnect	22	EA	$ 1,000.00	$ 22,000.00		$ 3,200.00	$ 70,400.00	$ 1,952.19	$ 42,948.18	$ 2,500.00	$ 55,000.00
17	Short Side Meter Reconnect	24	EA	$ 500.00	$ 12,000.00		$ 2,200.00	$ 52,800.00	$ 1,432.99	$ 34,391.76	$ 2,100.00	$ 50,400.00
18	Cut and Cap Existing Water Line	3	EA	$ 500.00	$ 1,500.00		$ 650.00	$ 1,950.00	$ 778.75	$ 2,336.25	$ 3,800.00	$ 11,400.00
19	Water Metal Detectable Tape	6,381	LF	$ 0.50	$ 3,190.50		$ 1.00	$ 6,381.00	$ 0.68	$ 4,339.08	$ 1.00	$ 6,381.00
20	Pavement Repair (Asphalt)	6,430	LF	$ 45.00	$ 289,350.00		$ 28.00	$ 180,040.00	$ 28.75	$ 184,862.50	$ 35.00	$ 225,050.00
21	Pavement Repair (Asphalt) - Service Line Replacement	790	LF	$ 30.00	$ 23,700.00		$ 14.00	$ 11,060.00	$ 28.75	$ 22,712.50	$ 35.00	$ 27,650.00
22	6" SDR35 PVC Sewer Line	996	LF	$ 45.00	$ 44,820.00		$ 110.00	$ 109,560.00	$ 214.57	$ 213,711.72	$ 250.00	$ 249,000.00
23	Replace Existing Concrete Manhole	1	EA	$ 1,000.00	$ 1,000.00		$ 10,650.00	$ 10,650.00	$ 10,612.80	$ 10,612.80	$ 9,500.00	$ 9,500.00
24	4' Diameter Concrete Manhole	1	EA	$ 1,500.00	$ 1,500.00		$ 8,000.00	$ 8,000.00	$ 10,308.75	$ 10,308.75	$ 9,500.00	$ 9,500.00
25	Cleanout	1	EA	$ 150.00	$ 150.00		$ 2,000.00	$ 2,000.00	$ 2,131.25	$ 2,131.25	$ 3,500.00	$ 3,500.00
26	Sewer Service Reconnect	21	EA	$ 250.00	$ 5,250.00		$ 2,200.00	$ 46,200.00	$ 2,006.08	$ 42,127.68	$ 4,500.00	$ 94,500.00
27	Pre-Construction Sewer Line Cleaning and Video	996	LF	$ 25.00	$ 24,900.00		$ 12.00	$ 11,952.00	$ 3.13	$ 3,117.48	$ 10.00	$ 9,960.00
28	Post-Construction Sewer Line Video	996	LF	$ 25.00	$ 24,900.00		$ 4.00	$ 3,984.00	$ 2.50	$ 2,490.00	$ 10.00	$ 9,960.00
29	Sewer Metal Detectable Tape	996	LF	$ 0.25	$ 249.00		$ 1.00	$ 996.00	$ 0.74	$ 737.04	$ 1.00	$ 996.00
30	Concrete Driveway Repair	40	LF	$ 45.00	$ 1,800.00	*	$ 105.00	$ 4,200.00	$ 187.50	$ 7,500.00	$ 200.00	$ 8,000.00
	TOTAL BASE BID A (Items 1 - 30)				**$ 971,674.50**	*		**$ 1,135,293.00**		**$ 1,263,908.59**	*		**$ 1,676,062.00**

ADDITIVE ALTERNATE BID

Item #	Item Description	Quantity	Unit	Unit Price	Total		Unit Price	Total	Unit Price	Total		Unit Price	Total
A1	Pipe Burst with 6" HDPE IPS DR17 PVC Sewer Line	996	LF	$ 270.00	$ 268,920.00	*	$ 246.00	$ 245,016.00	$ 241.32	$ 240,354.72		$ 160.00	$ 159,360.00
A2	Replace Existing Concrete Manhole	1	EA	$ 5,000.00	$ 5,000.00		$ 10,650.00	$ 10,650.00	$ 12,444.95	$ 12,444.95		$ 9,500.00	$ 9,500.00
A3	4' Diameter Concrete Manhole	1	EA	$ 2,500.00	$ 2,500.00		$ 8,000.00	$ 8,000.00	$ 10,308.75	$ 10,308.75		$ 9,500.00	$ 9,500.00
A4	Cleanout	1	EA	$ 1,250.00	$ 1,250.00		$ 2,100.00	$ 2,100.00	$ 2,881.25	$ 2,881.25		$ 3,500.00	$ 3,500.00
A5	Sewer Service Reconnect	21	EA	$ 1,000.00	$ 21,000.00		$ 3,132.00	$ 65,772.00	$ 2,034.00	$ 42,714.00		$ 4,500.00	$ 94,500.00
A6	Pre-Construction Sewer Line Cleaning and Video	996	LF	$ 25.00	$ 24,900.00		$ 12.00	$ 11,952.00	$ 3.13	$ 3,117.48		$ 10.00	$ 9,960.00
A7	Post-Construction Sewer Line Video	996	LF	$ 25.00	$ 24,900.00		$ 5.00	$ 4,980.00	$ 2.50	$ 2,490.00		$ 10.00	$ 9,960.00
A8	Sewer Metal Detectable Tape	0	LF	$ -	$ -		$ -	$ -	$ 110.63	$ -		$ -	$ -
A9	Concrete Driveway Repair	0	LF	$ -	$ -		$ -	$ -	$ 187.50	$ -		$ -	$ -
	TOTAL ALTERNATE BID A (ITEMS A1-A9)				**$ 348,470.00**	*		**$ 348,470.00**		**$ 314,311.15**			**$ 296,280.00**

(*) - Extension Error

JM TBPE Firm # 2448
JM TBAE Firm # BR2261
JM TBPLS Firm # 10194493

BIG SPRING
TEXAS

MEMORANDUM

Date: January 23, 2025

To: Mayor Robert H. Moore and Big Spring City Council Members

CC: Todd Darden, City Manager

From: Albert Belez, Purchasing Agent

Subject: Purchase Approval - Fairway Mower

Action Requested: Purchase review and approval of one Baroness Fairway Mower for the Comanche Trail Golf Course.

Background Information: This unit would replace a 1999 Toro fairway mower. The current unit is in need of replacement due to age and maintenance issues.

Financial Considerations:

Expenditure amount requested:	$64,370
What fund/department account will this amount be drawn from?	General Fund/390
Revenue generated:	N/A
Would this expenditure be made within the budget for the current fiscal year?	Yes
Does this commit the City to spending funds beyond the current fiscal year?	No

Vendor Bids/Quotations: We received three formal quotes. John Deere of Tornillo, Texas submitted a quote for $75,075.32. Toro from Euless, Texas submitted a quote for $73,689.02 and a Baroness of Alvarado, Texas, submitted a quote for $64,370.

Staff Opinion as to Feasibility and Timeline: City staff believe that Baroness is the best option. According to the staff at the Service Center, the Baroness is better suited for the tasks at the golf course, and maintenance, technical support, and parts services would be easier to get with Baroness. Detailed specifications are attached. According to the manufacturer, with proper maintenance, the unit could last 15 to 20 years.

Staff recommendation: City staff recommend proceeding with the purchase of the Fairway Mower from Baroness of Alvarado, Texas, in the amount of $64,370.

Detailed Specifications:

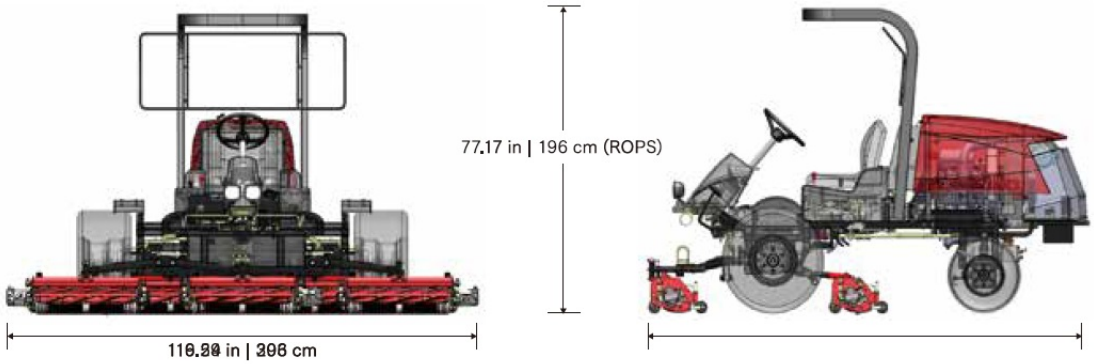

Model			LM531	
Dimensions	Total length		119.29 in	303 cm
	Total width	During operation	116.5 in	296 cm
		During transport	86.6 in	220 cm
	Total height	steering wheel	52.4 in	133 cm
		ROPS	77.17 in	196 cm
Weight (empty fuel tank)		with Slight lift, ROPS	2755.7 lb	1,250 kg
Minimum turning radius			110.2 in	280 cm
Engine	Model		Kubota D1105-E4B(Diesel)	
	Type		Vertical Water-cooled 4-cycle diesel engine	
	Total displacement		68.52 cu.in.	1,123 cm³ (1.123 L)
	Maximum output		17.3 kW(23.5 PS)/3,000 rpm	
Fuel tank capacity			Diesel 10.04 U.S.gal.	Diesel 38.0 dm³ (38.0 L)
Operating width (Mowing width)			99.2 in	252 cm
Operating height (Mowing height)			0.394 - 2.362 in	10 - 60 mm
Blades			9	
Drive	Traveling		HST (Full time 4WD)	
	Mowing		Hydraulic	
Speed (HST)	Forward		0 - 9.94 mph	0 - 16.0 km/h
	Reverse		0 - 4.97 mph	0 - 8.0 km/h
Efficiency			4.98 acres/hour (6.22 mph x mowing width x 0.8)	20,160 m²/h (10.0 km/h x mowing width x 0.8)

INTEROFFICE MEMORANDUM

Date: January 21, 2025

To: Mayor Robert H. Moore, Big Spring City Council, and Todd Darden, City Manager

From: Albert Belez, Purchasing Agent

Subject: Bid Award for ADA Compliant Parking Lot

Action Requested: Award of Bid No. 25-014, ADA Compliant Parking Lot

Background Information: Recently, a new All Abilities playground area was built at Comanche Park with a $750,000 donation from the Dora Roberts Rehabilitation Center. To provide parking for the playground, the City is funding an ADA compliant parking lot that will be built adjacent to the playground area. The parking lot will be approximately 24,000 square feet and meet ADA requirements with a one-year warranty. The City's Street Department will prepare the site, and the contractor will be responsible for priming the prepared site with CSS-1H (tack oil bonding agent) before installing 2" compacted type D hot-mix asphalt. The contractor will also strip the parking lot with commercial grade traffic paint, install signage and install five concrete wheel-stop barriers.

Financial Considerations:

Expenditure amount requested:	$68,750
What fund/department account will this amount be drawn from?	General Fund/370 Parks
Revenue generated:	N/A
Would this expenditure be made within the budget for the current fiscal year?	Yes
Does this commit the City to spending funds beyond the current fiscal year?	No

Vendor Bids/Quotations: We received four formal bids. Danny's Asphalt of Odessa, Texas submitted a bid in the amount of $71,950. C&B Excavation and Paving of Corsicana, Texas submitted a bid in the amount of $79,000. Ronnie Zahn Paving, Inc. of Lubbock, Texas submitted a bid in the amount of $179,457. Permian Paving of Midland, Texas submitted a bid in the amount of $68,750. Each bid reflects the cost with the requested and required payment bonds.

Staff Opinion as to Feasibility and Timeline: It is important to note, as the lowest bidder, Permian Paving also submitted a time frame of five days to complete the parking lot. Temperatures will need to be at least 45 degrees and rising for the contractor to perform the work.

Staff recommendation: It is our recommendation to award Bid No. 25-014 for an ADA Compliant Parking Lot to Permian Paving of Midland, Texas in the amount of $68,750.

RESOLUTION NO. _____

A RESOLUTION OF THE CITY COUNCIL OF THE CITY OF BIG SPRING, TEXAS, CALLING FOR A GENERAL ELECTION TO BE HELD ON MAY 3, 2025 FOR THE PURPOSE OF ELECTING ONE PERSON TO SERVE AS MAYOR OF THE CITY OF BIG SPRING AND ONE PERSON TO SERVE AS CITY COUNCIL MEMBER FOR DISTRICT FIVE; PROVIDING FOR THE CONDUCT OF THE ELECTION; DESIGNATING SEVERAL POLLING PLACES; AUTHORIZING THE MAYOR TO EXECUTE NOTICE AND HAVE THE NOTICE POSTED FOR THE PURPOSE OF NOTIFYING THE PUBLIC OF SAID ELECTION; AND PROVIDING FOR SEVERABILITY.

NOW, THEREFORE, BE IT RESOLVED BY THE CITY COUNCIL OF THE CITY OF BIG SPRING, TEXAS, THAT:

SECTION 1. A General Election shall be held on the 3rd day of May, 2025 for the purpose of electing of electing one person to serve as Mayor of the City of Big Spring and one person to serve as City Council Member for District Five in accordance with the Constitution and Laws of the State of Texas and the Charter of the City of Big Spring, Texas, and the manner of holding said election shall be governed by the laws of the State regulating general elections, the City Charter, and this Resolution.

SECTION 2. Each candidate shall make application in writing to the City Secretary for the candidate's name to appear on the official ballot no later than 5:00 p.m. of the sixty-second (62nd) before election day but no earlier than the thirtieth (30th) day before the date of the filing deadline, as required by sections 1.007 and 143.007 of the Texas Election Code. The application shall clearly designate the residence address of the candidate. Each candidate must reside in the city limits of the City of Big Spring. A candidate for Mayor may reside anywhere within the city limits shall have been a resident citizen of the City of Big Spring for a period of one (1) year immediately preceding the date of the election at required by Art. IV, Sec. 5 of the City Charter. A candidate for City Council District Five (5) must reside within District Five (5) and shall have been a resident citizen of the City of Big Spring District Five (5) for a period of one (1) year immediately preceding the date of the election as required by Art. IV, Sec. 5 of the City Charter.

SECTION 3. Only qualified electors under the general laws of the state who reside in the City of Big Spring city limits shall be qualified to vote for the office of Mayor; and only qualified electors under the general laws of the state who reside in the City District Five (5) shall be qualified to vote for the office of District Five (5).

SECTION 4. Voting by personal appearance during early voting and on election day shall be by a ballot scanning system, DRE (Direct Recording Electronic) System for curbside voting and by official paper ballot for early voting by mail and for provisional ballots. Early voting by personal appearance will be conducted at the Election Center for Howard County located at 2006 FM 700. Early voting will be held on weekdays beginning April 21, 2025 (12th day before election day but due to San Jacinto Day being a legal holiday, early voting will not be conducted

on this date early voting will **begin on April 22, 2025**) and ending April 29, 2025 (4th day before election day). The early voting polling place shall be open to the public from 7:00 a.m. to 7:00 p.m. on Monday, April 28, 2025 and Tuesday, April 29, 2025 and from 8:00 a.m. to 5:00 p.m. on all other days.

SECTION 5. The polling places on election day will be at the following vote center locations:

Dorothy Garrett Coliseum 1001 Birdwell Lane	Ryan Hall 605 North Main
Sand Springs Baptist Church 201 East 24th Street	Coahoma Community Center 306 North Ave. Coahoma, TX

The polling places shall be open to the public from 7:00 a.m. to 7:00 p.m.

SECTION 6. Mayor Robert H. Moore III is hereby authorized to execute and have posted notice of said election in accordance with the law.

SECTION 7. It is hereby declared to be the intention of the City Council that the sections, paragraphs, sentences, clauses and phrases of this Resolution are severable and if any phrase, clause, sentence, paragraph or section be declared unconstitutional or invalid by the valid judgment or decree of any court of competent jurisdiction, said unconstitutionality or invalidity shall not affect any of the remaining phrases, clauses, sentences, paragraphs, and sections of this Resolution.

PASSED AND APPROVED on first reading at a regular meeting of the City Council on the ___ _____ day of _____**, 2025**, with all members present voting "aye" for passage of same.

PASSSED AND APPROVED on second and final reading at a regular meeting of the City Council on the _____ day of _____**, 2025**, with all members present voting "aye" for passage of same.

_____
Robert H. Moore III, Mayor

ATTEST:

_____
Tami L. Davis, City Secretary

ELECTION SERVICES CONTRACT
between
HOWARD COUNTY, STATE OF TEXAS
and
CITY OF BIG SPRING

This Election Service Contract (the "Agreement") is by and between Howard County, State of Texas (the "County") and City of Big Spring ("COBS"), collectively referred to as "the Parties", regarding the conducting and supervision of the COBS's Elections to be held continuously from the date of this Agreement, until amended by either party, with the first election to be held the first Saturday, in May 2025.

This AGREEMENT is entered into the consideration of the mutual covenants and agreements as set forth herein.

THE PARTIES AGREE AS FOLLOWS:

A. ADMINISTRATION

1. The Parties appoint the Elections Administrator of Howard County, Texas, Jodi Duck, ("Elections Administrator"), to serve as the elections officer responsible for executing this Agreement and overseeing the completion of the duties and responsibilities as set forth herein.
2. The Elections Administrator agrees to coordinate, supervise, and handle all aspects of administering the election in accordance with the Texas Election Code and as outlined in this Agreement.

B. VOTING LOCATION

1. The County and Elections Administrator agree to perform the duties and responsibilities set forth in this Agreement at the County-Wide vote center polling places.

C. DUTIES & SERVICES OF ELECTIONS ADMINISTRATOR

1. The Elections Administrator shall be responsible for performing the following duties, and shall furnish the following services and equipment, as set forth in this section to conduct the Early Voting and Election Day Voting. The Elections Administrator shall:

   (a) Contact the owners or custodians of the county designated polling places and arrange for use of the facilities for the use in Early Voting and Election Day Voting to conduct the May City and School Joint Election; and
   (b) Procure and distribute all necessary election supplies, including:
      (i) Ballots;
      (ii) Election kits; and
      (iii) COBS's allotment of ballot boxes and voting booths provided by the county; and
   (c) Procure all necessary voting machines and equipment, as may be required by law, transport of machines and equipment for use at the polling places; and

(d) Appoint all Election Judges and Alternate Election Judges, Clerks, Early Voting Ballot Board, and notify the same of the date, time, and place of the election training and arrange for a facility for holding the election training; and
(e) Arrange for the use of a Central Counting Station and for the tabulating personnel and equipment needed at the counting station and assist in preparation of programs and test materials for tabulation of the ballots to be used with electronic voting equipment; and
(f) Publish and post all required legal notices, including the Notice of Election; and
(g) Assist in general overall supervision of the election and provide advisory services in connection with the decisions to be made and the actions to be taken by the officers of the COBS who are responsible for holding the election; and
(h) Prepare an estimate of the cost of the Election, and attach said estimate to this Agreement; and
(i) Maintain accurate records of all expenses incurred in connection with the responsibilities under this Agreement and make said records available to the COBS representatives; and
(j) Serve as custodian of election records; and
(k) Prepare any submission of voting changes it is obligated to submit to the Secretary of State; and
(l) File copies of this contract with the County Treasurer and the County Auditor of Howard County, Texas; and
(m) File electronic precinct by precinct returns with the Secretary of State.

D. DUTIES OF COBS

1. The COBS shall be responsible for performing the following:

(a) Preparation, adoption and publication of all required election orders, resolutions, notices and any other pertinent documents required by its governing body; and
(b) Costs shall be paid by the COBS in accordance with the Texas Election Code §31.100. The COBS agrees to pay the Elections Administrator 10% of the total amount of the Agreement, with a minimum amount of $75.00; and
(c) The COBS agrees to pay those employees whose services are required for contractual duties performed outside normal business hours. The COBS agrees to pay said employees 1 ½ times their regular wage for each hour worked beyond their normal business hours.
(d) Pay statement of costs provided by the Election Administrator, with the balance due thirty (30) days within receipt of the Final Cost Report. If any payment of estimated expenses exceeds the actual expenses, the amount of the difference shall be refunded to the COBS.

E. GENERAL PROVISIONS

1. Nothing contained in this contract shall authorize or permit a change in the officer with whom or the place at which any document or record relating to the elections is to be filed, the place at which any function is to be carried out, the officers who conduct the official canvass of the election returns, the officer to serve as custodian of the voted ballots or other elections records, or any other nontransferable functions specified by the Texas Election Code §31.096.
2. The Elections Administrator is the agent of the COBS for the purposes of contracting with third parties with respect to the election expenses within the scope of the Elections Administrators

duties, and the Elections Administrator is not liable for the COBS's failure to pay legitimate claims.

3. Only the actual expenses directly attributable to the Contract may be charged including administrative fees, as set forth in the Texas Election Code §31.100(b). The Elections Administrator must submit the actual costs incurred pursuant to this Contract to the COBS no later than ten (10) days after the final election or the day of Canvass, whichever is the latter.
4. Should the COBS cancel its election, this Election Services Contract will become void upon notification to the Election's Administrator. If the election is cancelled by the COBS, any funds paid by the COBS shall be refunded, less the amount owed for expenses incurred within the scope of the election up to the date of cancellation.

WITNESS the following signature and seal on this _____ day of _____, 2025:

CITY OF BIG SPRING

By:

_____

Title: _____

WITNESS the following signature and seal on this _____ day of _____, 2025:

HOWARD COUNTY ELECTION OFFICE

By:

_____

Jodi Duck
Howard County Elections Administrator

JOINT ELECTION AGREEMENT
BETWEEN
BIG SPRING INDEPENDENT SCHOOL DISTRICT
AND
THE CITY OF BIG SPRING, TEXAS

In compliance with 271.002(a) of the Texas Election Code, the Big Spring Independent School District and the City of Big Spring hereby agree to hold a joint election in conformance with the provisions set forth below.

1. Scope

   This Agreement covers the conduct of the City's regular election and the District's general trustee election, which are to be held on May 3, 2025 ("Election Day") as well as any special election which may be called by either Party which will be held on the above noted election day, jointly for the voters in the City of Big Spring and the Big Spring Independent School District.

2. Legal Documents

   The Parties shall each be responsible for the preparation, adoption, and publication (including bilingual publications) of their respective required election orders, resolutions, notices, Department of Justice pre-clearance submission (as required by the Civil Rights Act), and any other pertinent documents required by law, unless otherwise set forth herein.

3. Polling Places

   The Parties shall share common polling places as set forth in their respective election orders, and in accordance with Election Code §271.003 and Chapter 43 of the Election Code.

4. Conducting the Election

   a. The Parties have each entered into an Election Services Agreement with Howard County wherein the Elections Administrator has agreed to perform election duties ordinarily contemplated in a Joint Election Agreement. Accordingly, the terms of each Party's respective Election Service Contract shall bind the conduct of the election for each Party.
   b. In the event a conflict regarding the conduct of the election (with the exception of polling places) arises between this Agreement and the Election Services Agreement, the Election Services Agreement provision prevails.

5. Election Records Retention

Both Parties will be responsible for the retention of their respective records, in accordance with the Texas Election Code.

6. Order, Resolution, or Other Official Action

The Parties agree to state the terms of the Joint Election Agreement in an order, resolution, or other official action adopted by the governing body of each Party, at a lawfully called meeting, as required by Texas Election Code § 271.002(d).

7. Cancellation of Election

Should either Party cancel its election, this Agreement will become void upon notification to the other Party.

8. Preservation

An executed copy of this Agreement shall be preserved by each party for the period for preserving the precinct election records, as required by Texas Election Code §271.002(e), or longer as determined by each Party's records retention schedules.

9. Miscellaneous Provisions

a. This Agreement shall be construed under and in accordance with the laws of the State of Texas, and all obligations of the Parties created hereunder are performable in Howard County, Texas.
b. In the event one or more of the provisions contained in this Agreement shall for any reason be held to be invalid, illegal, or unenforceable in any respect, such invalidity, illegality, or unenforceability shall not affect any other provision hereof and this Agreement shall be construed as if such invalid, illegal, or unenforceable provision had never been contained herein.
c. The Parties shall comply with all applicable laws, ordinances, and codes of the State of Texas, all local governments, and any other entities with local jurisdiction.
d. The waiver by any party of a breach of any provision of this Agreement shall not operate as or be construed as a waiver of any subsequent breach.
e. Any amendment of this Agreement shall be of no effect unless in writing and signed by both Parties hereto.
f. This Agreement may be executed in multiple counterparts, each of which shall be deemed an original for all purposes.

CITY OF BIG SPRING

Robert Moore, Mayor

ATTEST:

BIG SPRING INDEPENDENT SCHOOL DISTRICT

Fabian Serrano,
School Board President

ATTEST:

BIG SPRING
TEXAS

COMMUNITY SERVICES MEMORANDUM

Date: 1/16/2025

To: Mayor and City Council
Todd Darden, City Manager

From: James Womble, **Tourism Coordinator**

Subject: Event Funding Request

We are respectfully requesting City Council approve the staff recommendation of $4,000 for event funding for the Together Trail Race hosted by Desert Athletic Company to take place at the Big Spring State Park on February 15, 2025. This is the third time for this event and it is estimated to bring in 15 hotel rooms.

This event meets the stipulations required by THLA to receive HOT funds and will be funded by the Convention and Visitors Bureau Event Funding budget.

If approved, the event funding budget will have a balance of $71,000 for the remainder of the fiscal year.

Event Funding --DATE--

Event	Hotel Rooms	$150	Hotel Revenue	Advertising	Total	Requesting	Staff Recommendation
Together Trail Race	15	$2,250.00	$2,250.00	$1,600.00	$3,850.00	$4,000.00	**$4,000.00**

	Event Funding:	**Advertising:**
EVENT NAME		$1,600.00

$4,000.00

Event Funding Cap	
300+ room nights	$ 25,000.00
200-300	$ 20,000.00
150-200	$ 17,000.00
100-150	$ 15,000.00
75-100	$ 10,000.00
50-75	$ 7,000.00
25-50	$ 5,000.00
11 to 25	$ 2,500.00
Less than 10	$ 1,000.00

Application

Date: 01/07/2025

Organization Information

Name of Organization:
Desert Athletics Fitness Council

Address:
3326 N. Midkiff Rd.

City, State, Zip:
Midland, TX 79705

Contact Name: Angie Hines Contact Phone Number: (325)518-6509

Contact Email: angie@theathleticcompany.com

Second Contact Name: Kayla Melendez Second Contact Email: rd@theathleticcompany.com

Second Contact Phone Number: (432)230-7677

Web Site Address for Event or Sponsoring Entity RunSignUp.com

Non-Profit or For-Profit status: Non-Profit Tax ID #: 93-1965691

Purpose of your organization:
Desert Athletic Fitness council facilitates family-centered educational and recreational events for the purpose of health and wellness.

Event Information

Name of Event Together Trail Race

Date of Event February 15, 2025

Primary Location of Event: Big Spring State Park

THLA Event Funding Formula:

# of Hotel Rooms 15 **X $150(amount per room)=$** 159 **X %50 of Hotel Revenue=**

$ 2385

Outside of Howard County Advertising: $ 1600

Total Amount Requested: $ 4000

How will the funds be used:

Online Marketing
Printing of Marketing Materials - posters, postcards
Employee time disbursement of printed materials

Description of Activities Planned (include schedule of events, samples of posters, flyers, ads, etc.) 3, 7, and 10 Mile Trail Run

8:00 AM - 10.5 Mile Start
8:30 AM - 7 Mile Start
9:00 AM 3.5 Mile Start

Questions for All Funding Request Categories:

1. How many years have you held this Event 2

2. Expected Attendance: 250

3. How many people attending the Event will use Big Spring hotels? 10+

Number of nights the visitors will stay (approximate): 1

4. Do you reserve a room block for this event at an area hotel and if so, for how many rooms and at which hotels:

AM. 15 ~~15~~ Room Block at Hotel Settles

5. Will you negotiate a special rate or hotel/event package to attract overnight stays?

Yes

6. How will you measure the impact of your event on area hotel activity (e.g.; room block usage information, survey of hoteliers, etc.)? After event survey

7. Please list other organization, government entities, and grants that have offered financial support to your project:

Midland Athletic Company - sponsorship

8. Will the event charge admission? Do you anticipate a net profit from the event? If there is a net profit, what is the anticipated amount and how will it be used?

Yes - $1000 - $1500 - it will be put back in non-profit fund

9. Please list all promotion efforts your organization is coordinating and the amount financially committed to each media outlet:

	Local:	Out of Area:
Newspaper:		
Radio:		
Tv:		
Other Paid Advertising:	Text message and e-mail marketing	

Number of Press Releases to Media _____ 15,000 x 3 e-mail marketing
Number Direct Mailings to out-of-town recipients _____
Other Promotions _____

10. Will you include a link to the CVB or other source on your promotional handouts and in your website? No

11. What new marketing initiatives will you utilize to promote hotel and convention activity for this event? Also include any marketing outside of Howard County.
A promotional was run with Hotel Settles and Hotel Settles offered a discounted rate.

This event is: ___Regional ✓ Statewide ___ National ___International

Does this event fall under the Texas Hotel Lodging Two Part Test:

1. Heads in Beds?
   a. (Yes) b. No

__ Convention Centers/Visitor Information Center __Registration of Convention Delegates
__ Advertising __Promotions of Arts __Historical Restoration or Preservation ✓Sporting Events
__Transportation __ Signage

I have read and I understand the requirements of the Convention and Visitors Bureau event funding application. I understand that failure to submit a follow up report within 90 days could possibly result in my event not receiving funds in the following year. A.H. Initial

Angie Hines
Signature

01/08/2025
Date

Angie Hines
Printed Name

Pre Event

REVENUE:

Projected

Start up Revenue (from previous proceeds, other sponsors, etc.)

Please list all sponsors individually

This amount will come from the RunSignUp page, and it just opened.

Total Projected Revenue $ _____ $ _____

EXPENSES:

Reynolds Printing	$600	
Amazon	$105	
Timing and Tags	$1,100	
Race Bibs	$200	
Medals	$608	
Portable Toilets	$275	
Marketing with Shadow Marketing	$1,243	

Total Projected Expenses $4,131.00 $ _____

Projected Profit (Loss) $ _____ $ _____