CITY COUNCIL REGULAR AGENDA

Tuesday, October 11, 2022

Notice is hereby given that the City Council of the City of Big Spring, Texas will meet in Regular Session on Tuesday, October 11, 2022, at 5:30 PM at the City Council Chambers Located at 307 East 4th Street, Big Spring, Texas. **We welcome the public to attend the meeting via telecommunication. Citizens will be able to view the City Council Meeting on Our Local Channel 17 through Suddenlink or on Our Website http://mybigspring.com/224/Channel-17-Live.**

CITY COUNCIL MEETING ETIQUETTE

Gentlemen are requested to remove their hats inside the City Council Chambers. As a courtesy to those in attendance, please place your cell phone on "Silent" or "Vibrate." Please, no talking during the meetings. Take all conversations outside so that others can hear.

Thank you!

Open Session

1. Call to Order — Moore
2. Invocation
3. Pledge of Allegiance to the United States Flag and to the Texas State Flag — Moore

Public Comment

Public Comment – Members of the public are entitled to speak on any topic. Additionally, members of the public may comment on any action item before or during its consideration. Speakers are Requested to Stand at the Podium and State Their Name and Address. Speakers Should Fill out the Form at the Podium and Turn it into the City Secretary. Please Do Not Exceed Five (5) Minutes.

4. **Public Comment**

Announcements, Presentations and Public Hearings

Public Hearings – The Council will take Input on Items Requiring Public Hearing Items **Prior** to any Action.

5.	**Proclamation -** Texas Chamber of Commerce Week	5	Moore

City Manager's Report

6.	City Manager's report on the following items: ○ Large Item Pickup, District 4 - Oct. 19, 2022 ○ Update on ARPA Funds		Darden

Consent Items

7.	Approval of the City Council Minutes of the Regular Meeting of September 27, 2022	6-13	Davis
8.	Final Reading of an Ordinance Amending the Big Spring City Code, Chapter 8 "Animals," Article V "Miscellaneous Regulations, in Order to Repeal Section 8-12 "Unlawful Restraint; Providing for Severability; and Providing an Effective Date	14-17	Williams
9.	Final Reading of a Resolution Requesting, on Behalf of the Citizens of Big Spring, That the Texas Department of Transportation Review the Proposal for a Truck Route for the City of Big Spring, Take Appropriate Action, and Notify the City of Comments, in Preparation for the City to Put into Place a New Truck Route	18-19	Darden
10.	Final Reading of a Resolution Finding that Oncor Electric Delivery Company LLC's ("Oncor" or "Company") Application to Change Rates Within the City Should be Denied; Finding that the City's Reasonable Rate Case Expenses Shall be Reimbursed by the Company; Finding that the Meeting at Which This Resolution is Passed is Open to the Public as Required by Law; Requiring Notice of this Resolution to the Company and Legal Counsel	20-22	Medina
11.	Final Reading of a Resolution in Support of State Funding to Match Competitive Federal Rail Programs	23-28	Medina

Vouchers

12.	Vouchers for 09/29/22 Drafts & Manual Cks.	$ 344,075.67 $ 139.603.30		Hughes
13.	Vouchers for 10/06/22 Manual Cks & Drafts	$ 359,397.21 $ 616,594.26		McDonald

Bids

14.	Consideration and Possible Action on Awarding a Bid to Purchase a Fire Truck and Authorizing the City Manager or His Designee to Execute any Necessary Documents	29-38	Ferguson
15.	Consideration and Possible Action on Awarding a Bid to Purchase an Ambulance and Authorizing the City Manager or His Designee to Execute any Necessary Documents	39-86	Ferguson
16.	Consideration and Possible Action on Awarding a Bid to Purchase Two EKG Monitors for EMS and Authorizing the City Manager or His Designee to Execute any Necessary Documents	87-91	Ferguson

New Business

17.	Consideration and Possible Action of the Big Spring Economic Development Corporation Annual Report for 2022	Handout	Mark Willis
18.	Consideration and Possible Action Authorizing Event Funding Requests from CVB for the following items: a. Oktoberfest b. Crossroads Comic and Toy Show	92-104	Lewis
19.	Consideration and Possible Action to Reschedule Two Regular City Council Meetings from November 22, 2022 at 5:30 pm to November 8 at 6:00 pm; and from December 27 at 5:30 pm to December 13 at 6:00 pm.		Moore
20.	First Reading of a Resolution Repealing City Council Resolution 013-2022 Which Authorized and Directed the City Manager to Submit an Application for a Safer Grant on Behalf of the Fire Department; Providing for Severability; and Providing an Effective Date	105	Medina
21.	First Reading of an Ordinance Amending Chapter 44 "Solid	106-	Bowles

Waste" Article I "In General," Section 44-7 "Collection by City: Exception," Subsection (d) to Update the Section with New Big Sandy Landfill Address; and Amending Section 44-8 "Collection of City-Furnished Containers," Subsection (c), to Prohibit the Blocking of Containers Set by the User; Providing for Severability; Providing for Publication; and Providing an Effective Date — 107

22. Boards & Committees — Moore

McMahon/Wrinkle Aviation Advisory Board
Johnathan Ray - Nominated by Mayor Pro Tem Ornelas, Dist. 1
Planning & Zoning Commission
Dale Avant - Nominated by Mayor Pro Tem Ornelas, Dist. 1

Council Input

23. Input

The City Council reserves the right to meet in executive session on any agenda item should the need arise pursuant to Chapter 551, Subchapter D of the Texas Government Code, or the Texas Disciplinary Rules of Professional Conduct.

I hereby certify that this agenda was posted on the official bulletin board at the City of Big Spring, City Hall Building, located outside 310 Nolan Street. Given by order of the City Council and **Posted on Friday, October 7, 2022 at 4:30 p.m.** in accordance with Title 5, Texas Government Code and Chapter 551.

In addition, this agenda and supporting documents are posted on the City of Big Spring's Website, www.mybigspring.com, in accordance with legal requirements.

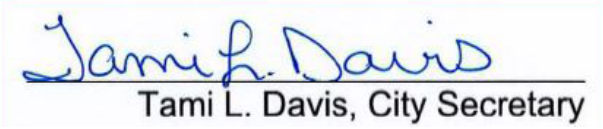

THE MEETING FACILITY IS ACCESSIBLE TO DISABLED PERSONS. ANY DISABLED PERSON NEEDING SPECIAL ACCOMMODATION OR A HEARING IMPAIRED PERSON WISHING TO HAVE AN INTERPRETER SHOULD REQUEST SERVICES AT LEAST 48 HOURS PRIOR TO THE SCHEDULED MEETING BY CONTACTINGTAMI DAVIS AT 432-264-2513 OR EMAIL: TDAVIS@MYBIGSPRING.COM.

PROCLAMATION DECLARING OCOTBER 17-21, 2022 AS
2022 TEXAS CHAMBER OF COMMERCE WEEK

WHEREAS, established in 1919, the Big Spring Area Chamber of Commerce is one of more than six hundred local chambers of commerce in Texas that have distinguished themselves as the voice of business in our state; and

WHEREAS, the mission of the Big Spring Area Chamber of Commerce is to advance the civic, economic, cultural, social betterment and interests of its members and to the citizens of Big Spring and Howard County; and

WHEREAS, the Big Spring Area Chamber of Commerce unceasingly promotes the community for quality growth and development; and

WHEREAS, the Big Spring Area Chamber of Commerce serves as an advocate for the creation, growth and general welfare of businesses in Big Spring and Howard County. The Chamber actively promotes the expansion of business opportunities on behalf of its members through referrals, seminars, partnerships, technical assistance, and marketing; and

WHEREAS, the Big Spring Area Chamber of Commerce has sought to achieve successful results for the State of Texas in a cooperative spirit with other organizations;

NOW, THEREFORE, I Mayor Robert H. Moore III of the City of Big Spring, Texas, do hereby proclaim the City of Big Spring's support of the Big Spring Area Chamber of Commerce and its many dedicated volunteers for its steadfast work on behalf of Big Spring and Howard County, and do proudly proclaim the week of October 17-21, 2022 as "Chamber of Commerce Week", in Big Spring, Howard County, Texas.

GIVEN UNDER MY HAND
and seal of the
City of Big Spring, Texas
this 11th day of October, 2022

_____
Robert H. Moore III, Mayor

STATE OF TEXAS :
COUNTY OF HOWARD :
CITY OF BIG SPRING :

The City Council of the City of Big Spring, Texas, met in a REGULAR AGENDA in the City Council Chambers located at 307 E. 4th St., Big Spring, Texas, at 5:30 PM, September 27, 2022, with the following members present in person:

ROBERT H. MOORE	Mayor
NICK ORNELAS	Mayor Pro Tem
DIANE YANEZ	Council Member
CODY HUGHES	Council Member
GLORIA MCDONALD	Council Member
TROY TOMPKINS	Council Member
MAURY SMITH	Council Member

Same and constituting a quorum, for which four Councilmembers must be present; and the following staff in person;

TODD DARDEN	City Manager
JOHN MEDINA	Assistant City Manager
ANDREW HAGEN	City Attorney
SHANE BOWLES	Public Works Director
CHAD WILLIAMS	Police Chief
CRAIG FERGUSON	Fire Chief
MIKE FEELEY	Airpark Director
SANDY SMITH	Finance Director
HAYLEY LEWIS	Community Services Director
TAMI DAVIS	City Secretary
TIM GREEN	Municipal Judge

Open Session

Call to Order

Invocation
Pastor T.J. Lipham, Trinity Baptist Church, gave the invocation.

Pledge of Allegiance to the United States Flag and to the Texas State Flag
Mayor Moore led the Pledge of Allegiance to the United States Flag and to the Texas State Flag.

Public Comment

Public Comment

Announcements, Presentations and Public Hearings

City Manager’s Report

City Manager's report on the following items:

- Update on Large Item Pickup, District 3 - Sept. 21, 2022
- Update on EDA Grant
- Boards and Committees
- TML Region IV Quarterly Meeting - October 28, 2022

Todd Darden, City Manager, gave an update on the above captioned items as follows: Large Item Pickup for District 3 picked up 6 Tons of Trash; the EDA Grant was approved; several opening need to be filled on the boards and committees; and also things are moving forward the improvements to the animal shelter.

Consent Items

Approval of the City Council Minutes of the Regular Meeting of September 13, 2022

Final Reading of a Resolution Seeking Permission to Apply for a Grant Through the Office of the Governor, Public Safety Office Criminal Justice Division for Funding of Bullet-Resistant Shields.

Final Reading of a Resolution Amending the Authorized Representatives Empowered to Transmit and Withdraw Funds from Texpool; and Declaring an Effective Date

Final Reading of a Resolution Reviewing and Approving the Investment Policy of the City of Big Spring

Final Reading of an Ordinance Amending Chapter 50 of the Code of Ordinances Entitiled "Utilities," Article IV Entitled "Utility Service Charges" by Amending Section 50-92 Entitled "Charges for Water Rates" Subsection B and Section 50-94 Entitled "Wastewater Rates" to Adjust Rates; Providing for Publication; and Providing an Effective Date

Final Reading of an Ordinance Amending Chapter 44 of the Big Spring Code of Ordinances Entitled "Solid Waste," Article I "In General," Section 44-11 "Permit for Private Collectors;" Amending Chapter 44 of the Big Spring Code of Ordinances Entitled "Solid Waste," Article II "Collections and Landfill Fees" Section 44-41 "Rates" to Amend the Rate Schedule; Providing for Severability; Providing for Publication; and Providing an Effective Date

Final Reading of an Ordinance Fixing and Levying Municipal Ad Valorem Taxes for Said City for the Year 2022; Directing the Assessment and Collection Thereof; Providing for Severability; and Establishing an Effective Date

Final Reading of an Ordinance Adopting an Annual Budget for the City of Big Spring, Texas for the Fiscal Year Beginning October 1, 2022 and Ending September 30, 2023; Providing for Severability; Providing for Publication; and Providing an Effective Date

Final Reading of an Ordinance Establishing the Pay Schedule for Classified Positions Within the Police Department for the Fiscal Year 2022-23; Providing for Repeal of Ordinances in Conflict Herewith; and Providing for an Effective Date

Final Reading of an Ordinance Establishing the Fire Department Pay Scale for the Fiscal Year 2022-23 in Accordance with Chapter 143 of the Texas Local Government Code; Providing for the Repeal of Ordinances in Conflict Herewith; and Providing for an Effective Date

Final Reading of An Ordinance of the City Council Of Big Spring, Texas, Amending Chapter 32 of The Big Spring City Code Entitled “Licenses, Taxation And Miscellaneous Business,” Article Ii “Taxation,” Division 2 “Hotel Occupancy Tax,” Section 32-65 “Revenues-Use” to Add A New Subsection 3 to Waive the 5-Year Limitation on Assistance; and Amending Chapter 40 of the Big Spring City Code Entitled “Parks, Recreation And Cultural Affairs”, Article Iv “Dora Roberts Community Center”, Section 40-110 “Administration” Subsection (B) to Make Exceptions to the Board’s Duties; Providing For Severability; And Providing An Effective Date.

Acknowledge Receipt of the Big Spring Economic Development Corporation Board of Director's Minutes of the Regular Meeting of August 30, 2022

MOTION WAS MADE BY Mayor Pro Tem Ornelas to approve the above captioned resolutions, ordinances and minutes, seconded by Council Member Yanez.

YEAS: Mayor Moore, Mayor Pro Tem Ornelas, Council Member Yanez, Council Member Hughes, Council Member McDonald, Council Member Tompkins, Council Member Smith	**7**
NAYS: None	**0**

MOTION PASSED

Vouchers

Vouchers for 09/15/22	$	475,250.64
Vouchers for 09/22/22	$	1,473,222.66
Manual Cks & Drafts	$	566,227.06

Council Member Hughes reviewed the above captioned vouchers.
MOTION WAS MADE BY Council Member Hughes to approve the above captioned vouchers, seconded by Council Member Smith.

YEAS: Mayor Moore, Mayor Pro Tem Ornelas, Council Member Yanez, Council Member Hughes, Council Member McDonald, Council Member Tompkins, Council Member Smith	**7**
NAYS: None	**0**

MOTION PASSED

Bids

Consideration and Possible Action on Awarding Annual Bids and Authorizing the CIty Manager or His Designee to Execute any Necessary Documents as Follows (Items 20-28):

MOTION WAS MADE BY Council Member Hughes to award the above captioned annual bids by staff recommendation (Items 20-28) as follows, seconded by Council Member Tompkins:

YEAS: Mayor Moore, Mayor Pro Tem Ornelas, Council Member Yanez, Council Member Hughes, Council Member McDonald, Council Member Tompkins, Council Member Smith	**7**
NAYS: None	**0**

MOTION PASSED

Aluminum Sulfate
Aluminum Sulfate to Chameleon Industries in the amount of $252,500.00;

Anhydrous Ammonia
Anhydrous Ammonia to DPC Industries in the amount of $82,000.00;

Liquid Chlorine
Liquid Chlorine to DPC Industries in the amount of $305,370.00;

Polymer
Polymer to Polydyne, Inc. in the amount of $74,000.00;

Sulfur Dioxide
Sulfur Dioxide to DPC Industries in the amount of $43,000.00;

Sodium Hydroxide
Sodium Hydroxide to DPC Industries in the amount of $53,250.00;

Sodium Permanganate
Sodium Permanganate to Shannon Chemical Corporation in the amount of $53,250.00;

Valves and Fittings
Valves and Fittings to Benmark Supply Company in the amount of $688,835.57;

DRCC Janitorial Services
DRCC Janitorial Services to Evan's Janitorial Service in the amount of $8,940.00.

New Business

First Reading of an Ordinance Amending the Big Spring City Code, Chapter 8 "Animals," Article V "Miscellaneous Regulations, in Order to Repeal Section 8-12 "Unlawful Restraint; Providing for Severability; and Providing an Effective Date

MOTION WAS MADE BY Mayor Pro Tem Ornelas to approve the above captioned ordinance, seconded by Council Member Smith.

YEAS: Mayor Moore, Mayor Pro Tem Ornelas, Council Member Yanez, Council Member Hughes, Council Member McDonald, Council Member Tompkins, Council Member Smith	**7 0**
NAYS: None	

MOTION PASSED

First Reading of a Resolution Requesting, on Behalf of the Citizens of Big Spring, That the Texas Department of Transportation Review the Proposal for a Truck Route for the City of Big Spring, Take Appropriate Action, and Notify the City of Comments, in Preparation for the City to Put into Place a New Truck Route

MOTION WAS MADE BY Council Member McDonald to approve the above captioned resolution, seconded by Council Member Hughes.

YEAS: Mayor Moore, Mayor Pro Tem Ornelas, Council Member Yanez, Council Member Hughes, Council Member McDonald, Council Member Tompkins, Council Member Smith	**7 0**
NAYS: None	

MOTION PASSED

First Reading of a Resolution Finding that Oncor Electric Delivery Company LLC's ("Oncor" or "Company") Application to Change Rates Within the City Should be Denied; Finding that the City's Reasonable Rate Case Expenses Shall be Reimbursed by the Company; Finding that the Meeting at Which This Resolution is Passed is Open to the Public as Required by Law; Requiring Notice of this Resolution to the Company and Legal Counsel

MOTION WAS MADE BY Council Member Hughes to approve the above captioned resolution, seconded by Council Member Tompkins.

YEAS: Mayor Moore, Mayor Pro Tem Ornelas, Council Member Yanez, Council Member Hughes, Council Member McDonald, Council Member Tompkins, Council Member Smith **7 0**
NAYS: None

MOTION PASSED

First Reading of a Resolution in Support of State Funding to Match Commpetitive Federal Rail Programs

MOTION WAS MADE BY Council Member Tompkins to approve the above captioned resolution, seconded by Council Member McDonald.

YEAS: Mayor Moore, Mayor Pro Tem Ornelas, Council Member Yanez, Council Member Hughes, Council Member McDonald, Council Member Tompkins, Council Member Smith **7 0**
NAYS: None

MOTION PASSED

Consideration and Possible Action Regarding the Request for Hotel Tax Funds for Use of the Dora Roberts Community Center for the West Texas Disc Golf Champions Tournament.

MOTION WAS MADE BY Council Member Yanez to approve the above captioned request, seconded by Council Member Hughes.

YEAS: Mayor Moore, Mayor Pro Tem Ornelas, Council Member Yanez, Council Member Hughes, Council Member McDonald, Council Member Tompkins, Council Member Smith **7 0**
NAYS: None

MOTION PASSED

Consideration and Possible Action on a Contract Agreement with Area Agency on Aging of the Permian Basin Regional Planning Commission and Authorizing the Mayor to Execute any Necessary Documents.

MOTION WAS MADE BY Council Member Smith to approve the above captioned agreement, seconded by Council Member Hughes.

YEAS: Mayor Moore, Mayor Pro Tem Ornelas, Council Member Yanez, Council Member Hughes, Council Member McDonald, Council Member Tompkins, Council Member Smith **7 0**

NAYS: None

MOTION PASSED

Consideration and Possible Action to Accept a Gift of Real Property at 200 Galveston Street

MOTION WAS MADE BY Council Member Smith to accept the above captioned gift of real property, seconded by Council Member Hughes.

YEAS: Mayor Moore, Mayor Pro Tem Ornelas, Council Member Yanez, Council Member Hughes, Council Member McDonald, Council Member Tompkins, Council Member Smith	**7**
	0

NAYS: None

MOTION PASSED

Boards & Committees

Big Spring Economic Development Corporation

Raul Benavides - Nominated by Council Member McDonald

Kristy Tyra - Nominated by Council Member Smith

MOTION WAS MADE BY Council Member Hughes to appoint Raul Benavides and Kristy Tyra to the Big Spring Economic Development Board of Directors, seconded by Council Member Tompkins.

YEAS: Mayor Moore, Mayor Pro Tem Ornelas, Council Member Yanez, Council Member Hughes, Council Member McDonald, Council Member Tompkins, Council Member Smith	**7**
	0

NAYS: None

MOTION PASSED

Council Input

Input

All Council Members thanked the staff on various issues.

Executive Session

ADJOURN into Executive Session in Matters Covered by Texas Government Code Section 551.074 "Personnel Matters; Closed Meeting" to Deliberate the Appointment, Employment, Evaluation and Duties of Municipal Judge

ADJOURN into Executive Session in Accordance with the Purposes Permitted by the Open Meetings Act, Section 551.087, Texas Government Code, “Deliberation Regarding Economic Development Negotiations; Closed Meeting” to Discuss and Deliberate Economic Development Negotiations.

MOTION WAS MADE BY Council Member Smith to adjourn into the above

captioned executive sessions at 6:30 p.m., seconded by Council Member Yanez.

YEAS: Mayor Moore, Mayor Pro Tem Ornelas, Council Member Yanez, Council Member Hughes, Council Member McDonald, Council Member Tompkins, Council Member Smith **7**
NAYS: None **0**

MOTION PASSED

RECONVENE into Open Session and Take any Necessary Action on Executive Session Items

MOTION WAS MADE BY Mayor Pro Tem Ornelas to reconvene into open session at 7:45 p.m., seconded by Council Member Yanez.

YEAS: Mayor Moore, Mayor Pro Tem Ornelas, Council Member Yanez, Council Member Hughes, Council Member McDonald, Council Member Tompkins, Council Member Smith **7**
NAYS: None **0**

MOTION PASSED

MOTION WAS MADE BY Council Member Hughes to appoint Timothy Green as Associate Judge and authorize the Mayor to sign an agreement as modified by the City Attorney and compensation through October 31, 2022 will be current salary but as an independent consultant, further compensation will be an equivical hourly rate, seconded by Council Member Yanez.

YEAS: Mayor Moore, Mayor Pro Tem Ornelas, Council Member Yanez, Council Member Hughes, Council Member McDonlad, Council Member Tompkins, Council Member Smith **7**
NAYS:None **0**

MOTION

No action was taken on the Economic Development Negotiations.

ADJOURN

Mayor Moore adjourned the council meeting at 7:47 p.m.

_____
Robert H. Moore III, Mayor

ATTEST:

_____
Tami L. Davis, City Secretary

Memorandum

To: Honorable Mayor, City Council, and City Manager

From: Chad Williams, Chief of Police

Date: April 19, 2022

Subject: Repeal of City Ordinance Section 8-122 Unlawful Restraint

---

On January 18, 2022, Texas Senate Bill 5 went into effect, which regulates tethering in the State by providing guidelines on how a dog may be tethered. Previously, Texas did not regulate the tethering of animals and left it up to each city or county.

The City of Big Spring has had a tethering ordinance for numerous years, but we feel that the new state law adequately provides guidelines and restrictions for citizens to safely tether their animal if need be. We also feel that repealing our current tethering ordinance which, strictly prohibited the tethering of animals unless on a leash held by a person, could reduce some of our dogs running at large, particularly ones that are able to jump or climb fences or enclosures. I have attached the State tethering law for your review. It is staff's recommendation that we repeal our city ordinance and instead use the State law regarding tethering within our city.

Your consideration in this matter is greatly appreciated.

Sec. 821.102. UNLAWFUL RESTRAINT OF DOG; OFFENSE. (a) An owner may not leave a dog outside and unattended by use of a restraint unless the owner provides the dog access to:

(1) adequate shelter;

(2) an area that allows the dog to avoid standing water and exposure to excessive animal waste;

(3) shade from direct sunlight; and

(4) potable water.

(b) An owner may not restrain a dog outside and unattended by use of a restraint that:

(1) is a chain;

(2) has weights attached;

(3) is shorter in length than the greater of:

(A) five times the length of the dog, as measured from the tip of the dog's nose to the base of the dog's tail; or

(B) 10 feet; or

(4) is attached to a collar or harness not properly fitted.

(c) A person commits an offense if the person knowingly violates this section. The restraint of each dog that is in violation is a separate offense.

(d) An offense under this section is a Class C misdemeanor, except that the offense is a Class B misdemeanor if the person has previously been convicted under this section.

(e) If conduct constituting an offense under this section also constitutes an offense under any other law, the actor may be prosecuted under this section, the other law, or both.

Added by Acts 2021, 87th Leg., 3rd C.S., Ch. 6 (S.B. 5), Sec. 1, eff. January 18, 2022.

Sec. 821.103. EXCEPTIONS. (a) Section 821.102 does not apply to:

(1) the use of a restraint on a dog in a public camping or recreational area in compliance with the requirements of the public camping or recreational area as defined by a federal, state, or local authority or jurisdiction;

(2) the use of a restraint on a dog while the owner and dog engage in, or actively train for, an activity conducted under a valid license issued by this state provided the activity is associated with the use or presence of a dog;

(3) the use of a restraint on a dog while the owner and dog engage in conduct directly related to the business of shepherding or herding cattle or livestock;

(4) the use of a restraint on a dog while the owner and dog engage in conduct directly related to the business of cultivating agricultural products;

(5) a dog left unattended in an open-air truck bed only for the time reasonably necessary for the owner to complete a temporary task that requires the dog to be left unattended in the truck bed;

(6) a dog taken by the owner, or another person with the owner's permission, from the owner's residence or property and restrained by the owner or the person for not longer than the time necessary for the owner to engage in an activity that requires the dog to be temporarily restrained; or

(7) a dog restrained while the owner and dog are engaged in, or actively training for, hunting or field trialing.

(b) Section 821.102(b)(3) does not apply to a restraint attached to a trolley system that allows a dog to move along a running line for a distance equal to or greater than the lengths specified under that subdivision.

(c) This subchapter does not prohibit a person from walking a dog with a handheld leash.

Added by Acts 2021, 87th Leg., 3rd C.S., Ch. 6 (S.B. 5), Sec. 1, eff. January 18, 2022.

Sec. 821.104. EFFECT OF SUBCHAPTER ON OTHER LAW. This subchapter does not preempt a local regulation relating to the restraint of a dog or affect the authority of a political subdivision to adopt or enforce an ordinance or requirement relating to the restraint of a dog if the regulation, ordinance, or requirement:

(1) is compatible with and equal to or more stringent than a requirement prescribed by this subchapter; or

(2) relates to an issue not specifically addressed by this subchapter.

Added by Acts 2021, 87th Leg., 3rd C.S., Ch. 6 (S.B. 5), Sec. 1, eff. January 18, 2022.

ORDINANCE NO. _____

AN ORDINANCE OF THE CITY COUNCIL OF THE CITY OF BIG SPRING, TEXAS AMENDING THE BIG SPRING CITY CODE, CHAPTER 8 "ANIMALS," ARTICLE V "MISCELLANEOUS REGULATIONS, IN ORDER TO REPEAL SECTION 8-122 "UNLAWFUL RESTRAINT; PROVIDING FOR SEVERABILITY; AND PROVIDING AN EFFECTIVE DATE

WHEREAS, the City of Big Spring is a Texas home rule municipality; and

WHEREAS, the City Council of Big Spring has, by ordinance, prohibited the restraint or anchoring of a dog or cat by means of a tether, cable, rope, or cord to an inanimate object; and

WHEREAS; the City Council expresses its continual disapproval of practices that are harmful to animals, including unlawful restraint; and

WHEREAS, the 87th Texas Legislature enacted S.B. 5 in its 3rd called session to prohibit the unlawful restraint of dogs statewide, and such prohibition became effective January 18, 2022; and

WHEREAS, the new state law prohibits harmful restraint practices such as restraining dogs without access to food, water or shelter, restraining a dog in an area fouled by waste; and restraining a dog with an improperly fitted collar or choke collar; and

WHEREAS, other state laws and City ordinances will continue prohibit to animal cruelty and animal neglect, and

WHEREAS, the City Council finds that the existing City ordinance prohibiting the unlawful restraint of a dog or cat should be repealed, as dogs and cats will be protected by state law and City ordinances;

NOW, THEREFORE, BE IT ORDAINED BY THE CITY COUNCIL OF THE CITY OF BIG SPRING, TEXAS, AS FOLLOWS, THAT:

SECTION 1. Big Spring City Code, Chapter 8 entitled "Animals," Article V entitled "Miscellaneous Regulations," Section 8-122 entitled "Unlawful Restraint" be repealed in its entirety and the section reserved, as follows:

Sec. 8-122. – ~~Unlawful restraint.~~ Reserved.

~~It shall be unlawful for a custodian of any dog or cat to restrain or anchor a dog or cat by means of a tether, cable, rope, or cord, unless the tether or restraint is being personally held by a person. No dog or cat may be attached to any inanimate object.~~

NOTE* Language to be added appears underlined and language to be deleted is ~~stricken~~.

SECTION 2. Should any section, paragraph, sentence, clause, phrase, or word of this ordinance be declared unconstitutional or invalid for any purpose, the reminder of this ordinance shall not be affected thereby.

SECTION 3. All ordinances or parts of ordinances in conflict herewith are hereby repealed to the extent of the conflict.

SECTION 4. This Ordinance shall take effect immediately after passage in accordance with the provisions of the Charter of the City of Big Spring, and it is accordingly so ordained.

PASSED AND APPROVED on first reading at a regular meeting of the City Council on the **27th** day of **September**, **2022** with all members of the Council voting "aye" for the passage of same.

PASSED AND APPROVED on second and final reading at a regular meeting of the City Council on the **11th** day of **October**, **2022** with all members of the Council voting "aye" for the passage of same.

_____
Robert H. Moore, III, Mayor

ATTEST:

_____
Tami L. Davis, City Secretary

RESOLUTION NO. _____

A RESOLUTION OF THE CITY COUNCIL OF THE CITY OF BIG SPRING, TEXAS REQUESTING, ON BEHALF OF THE CITIZENS OF BIG SPRING, THAT THE TEXAS DEPARTMENT OF TRANSPORTATION REVIEW THE PROPOSAL FOR A TRUCK ROUTE FOR THE CITY OF BIG SPRING, TAKE APPROPRIATE ACTION, AND NOTIFY THE CITY OF COMMENTS, IN PREPARATION FOR THE CITY TO PUT INTO PLACE A NEW TRUCK ROUTE.

WHEREAS, many Big Spring residents have voiced their concerns for large trucks not stopping in Big Spring to be routed around the City; and

WHEREAS, the City of Big Spring is a Texas home rule municipal corporation; and

WHEREAS, the governing body of the City of Big Spring is the City Council of Big Spring under the Charter of the City of Big Spring, Article IV, Section 1a; and

WHEREAS, Designated the William B. Crooker Memorial Highway under Section 225.110, Texas Transportation Code, the US 87 Truck Relief Route was completed in 2020, laying important groundwork for the Ports to Plains Corridor; and

WHEREAS, US Highway 87 now routes around the city limits of Big Spring, from Interstate Highway 20 north of Big Spring southward to a location near Mitchell Road, with the former route redesignated as Business US Highway 87-M which continues to run through Big Spring; and

WHEREAS, with the US 87 Truck Relief Route in place, trucks traveling north and south through Big Spring can already drive around the City; and

WHEREAS, a primary truck route would allow signs to be placed at appropriate places directing truck traffic appropriately; and

WHEREAS, the City Council of Big Spring strongly shares the concerns of its citizens and respectfully requests consideration for review, comment, and approval of primary truck routes in the City;

NOW, THEREFORE, BE IT RESOLVED BY THE CITY COUNCIL OF THE CITY OF BIG SPRING, TEXAS, AS FOLLOWS, THAT:

SECTION 1: It is the sense of the City Council of Big Spring that primary truck routes should be established or revised within the city limits of Big Spring, Texas. City Council has interest in adopting an ordinance that would prohibit a truck driving through Big Spring while not having

commercial business in Big Spring, unless the truck remains on primary truck routes. The following are proposed as the primary truck routes within the city limits of Big Spring:

(a) Interstate Highway 20 from the west city limits to the east city limits. This would include Interstate Highway 20's service roads, exit ramps, on ramps, and overpasses. This would exclude the small part not within city limits.
(b) Business Interstate Highway 20-G from west city limits (near its intersection with Interstate Highway 20) to its intersection with Farm to Market Road 700 (Marcy Drive).
(c) Farm to Market Road 700 (Marcy Drive) from its intersection with Business Interstate Highway 20-G to its intersection with Interstate Highway 20 on the east side of the City.
(d) Business Interstate Highway 20-G from its intersection with Farm to Market Road 700 (Marcy Drive) to Interstate Highway 20.
(e) State Highway 350 from the north city limits to Interstate Highway 20.
(f) State Highway 176 from the north city limits to Interstate Highway 20.

Notably excluded from this list is Business US Highway 87-M. City Council believes this may be excluded from the primary truck routes due to the existence of the US 87 Truck Relief Route, designated as the William B. Crooker Memorial Highway.

SECTION 2: The City Council of Big Spring hereby directs the City Manager to submit this proposal in writing for re-routing trucks on the state highway system to the Abilene Texas Department of Transportation district office for review and comment.

SECTION 3: The City Council hereby requests that TxDOT proceed to review and act on this proposal, such as by notifying the City of Big Spring of comments according to TxDOT's process, as specified in the TxDOT Sign Guidelines and Applications Manual, and to please direct such comments to the City Manager of Big Spring.

PASSED AND APPROVED on first reading at a regular meeting of the City Council on the **27th** day of **September**, **2022** with all members of the Council voting "aye" for the passage of same.

PASSED AND APPROVED on second and final reading at a regular meeting of the City Council on the **11th** day of **October**, **2022** with all members of the Council voting "aye" for the passage of same.

_____
Robert H. Moore, III, Mayor

ATTEST:

_____
Tami L. Davis, City Secretary

MODEL STAFF REPORT REGARDING
ONCOR ELECTRIC'S REQUESTED RATE CHANGE

***

Purpose:

On May 13, 2022, Oncor Electric Delivery Company LLC ("Oncor" or "Company") filed an application with cities retaining original jurisdiction seeking to increase system-wide transmission and distribution rates by about $251 million or approximately 4.5% over present revenues. The Company asks the City to approve an 11.2% increase in residential rates and a 1.6% increase in street lighting rates. The impact of this requested increase on an average residential customer using 1,300 kWh/month would be about $6.02 per month.

In a prior City action, Oncor's rate request was suspended from taking effect for 90 days, the fullest extent permissible under the law. This time period has permitted the City, through its participation with the Steering Committee of Cities Served by Oncor ("Steering Committee"), to determine that the proposed rate increase is unreasonable. Consistent with the recommendations of the experts engaged by the Steering Committee, Oncor's request for a rate increase should be denied.

Accordingly, the purpose of the Resolution is to deny the rate change application proposed by Oncor. Once the Resolution is adopted, Oncor will have 30 days to appeal the decision to the Public Utility Commission of Texas where the appeal will be consolidated with Oncor's filing (i.e. PUC Docket No. 53601) currently pending at the Commission.

All cities with original jurisdiction will need to adopt the Resolution ***prior to*** **October 30, 2022.**

Explanation of "Be It Resolved" Sections:

1. This paragraph finds that the Company's application is unreasonable and should be denied.

2. This section states that the Company's current rates shall not be changed.

3. The Company will reimburse Cities for their reasonable rate case expenses. Legal counsel and consultants approved by Cities will submit monthly invoices that will be forwarded to Oncor for reimbursement.

4. This section merely recites that the resolution was passed at a meeting that was open to the public and that the consideration of the Resolution was properly noticed.

5. This section provides Oncor and counsel for Cities will be notified of the City's action by sending a copy of the approved and signed resolution to counsel.

RESOLUTION NO. _____

A RESOLUTION OF THE CITY OF BIG SPRING, TEXAS FINDING THAT ONCOR ELECTRIC DELIVERY COMPANY LLC'S ("ONCOR" OR "COMPANY") APPLICATION TO CHANGE RATES WITHIN THE CITY SHOULD BE DENIED; FINDING THAT THE CITY'S REASONABLE RATE CASE EXPENSES SHALL BE REIMBURSED BY THE COMPANY; FINDING THAT THE MEETING AT WHICH THIS RESOLUTION IS PASSED IS OPEN TO THE PUBLIC AS REQUIRED BY LAW; REQUIRING NOTICE OF THIS RESOLUTION TO THE COMPANY AND LEGAL COUNSEL.

WHEREAS, the City of Big Spring, Texas ("City") is an electric utility customer of Oncor Electric Delivery Company LLC ("Oncor" or "Company"), and a regulatory authority with an interest in the rates and charges of Oncor; and

WHEREAS, the City is a member of the Steering Committee of Cities Served by Oncor ("Steering Committee"), a coalition of similarly situated cities served by Oncor that have joined together to efficiently and cost effectively review and respond to electric issues affecting rates charged in Oncor's service area; and

WHEREAS, on or about May 13, 2022, Oncor filed with the City an application to increase system-wide transmission and distribution rates by $251 million or approximately 4.5% over present revenues. The Company asks the City to approve an 11.2% increase in residential rates and a 1.6% increase in street lighting rates; and

WHEREAS, the Steering Committee is coordinating its review of Oncor's application and working with the designated attorneys and consultants to resolve issues in the Company's filing; and

WHEREAS, through review of the application, the Steering Committee's consultants determined that Oncor's proposed rates are excessive; and

WHEREAS, the Steering Committee's members and attorneys recommend that members deny the Application; and

NOW, THEREFORE, BE IT RESOLVED BY THE CITY COUNCIL OF THE CITY OF BIG SPRING, TEXAS, AS FOLLOWS, THAT:

Section 1. That the rates proposed by Oncor to be recovered through its electric rates charged to customers located within the City limits, are hereby found to be unreasonable and shall be denied.

Section 2. That the Company shall continue to charge its existing rates to customers within the City.

Section 3. That the City's reasonable rate case expenses shall be reimbursed in full by Oncor within 30 days of the adoption of this Resolution.

Section 4. That it is hereby officially found and determined that the meeting at which this Resolution is passed is open to the public as required by law and the public notice of the time, place, and purpose of said meeting was given as required.

Section 5. That a copy of this Resolution shall be sent to Oncor, Care of Howard Fisher, Oncor Electric Delivery Company, LLC, 1616 Woodall Rodgers Freeway, Dallas, Texas 75202 and to Thomas Brocato, Counsel to the Steering Committee, at Lloyd Gosselink Rochelle & Townsend, P.C., 816 Congress Ave., Suite 1900, Austin, TX 78701.

PASSED AND APPROVED on first reading at a regular meeting of the City Council on the **27th** day of **September**, **2022** with all members of the Council voting "aye" for the passage of same.

PASSED AND APPROVED on second and final reading at a regular meeting of the City Council on the **11th** day of **October**, **2022** with all members of the Council voting "aye" for the passage of same.

_____
Robert H. Moore, III, Mayor

ATTEST:

_____
Tami L. Davis, City Secretary

INTEROFFICE MEMORANDUM

Date:	September 22, 2022
To:	Honorable Mayor, City Council, City Manager
From:	John Medina, Assistant City Manager
Re:	State Funding to Match Competitive Federal Rail Programs

The Infrastructure Law passed last fall by Congress resulted in an historic $36 billion in advanced appropriation for freight and passenger rail projects to rebuild core infrastructure and improve safety and accessibility. This includes $5 billion for CRISI, Consolidated Rail Infrastructure and Safety Improvement Program, over 5 years. Another $5 billion goes to states for needed highway at-grade rail crossing upgrades.

Many of the programs to be administered by the U.S. Department of Transportation's Federal Railroad Administration will be through a competitive grant process and will require a state match of at least 20-30% of project costs. Over the past decade Texas missed out on our share of $19 billion in funding for worthy rail projects, according to data from the FRA, because the state was not able to pursue competitive grant programs and those $19 billion in federal funds went to many other states. Texas will not be eligible for competitive federal-state rail project funding in the IIJA if we don't have a state match.

Texas has always been a strong participant in federal-state highway cost-sharing programs – by doing the same with state matching Texas can take advantage and do the same for rail with this once-in-a-generation IIJA law.

The Rail Division at the Texas Department of Transportation, only established in 2009, lacks the means to pursue federal competitive grants. Give TxDOT Rail Division the financial tools it needs to accommodate the growing needs of moving goods and people by rail throughout the state.

Appropriated Fund 0306, Texas Rail Relocation and Improvement Fund was approved by voters in 2006 but has remained unfunded. Rail Relo Fund can expand economic opportunity, relieve congestion on public highways, enhance public safety, improve air quality, and construct railroad overpasses and underpasses. We need a kickstart appropriation for the Rail Relo fund to take advantage of competitive federal-state cost-sharing programs.

Texas has 10,500 miles of rail, over 10,000 highway-rail crossings, over 5,400 rail bridges and moves more freight rail cars than most any other state. Railroad Crossing Elimination program will send $5.5 billion to states to eliminate dangerous highway-rail crossings. In 2021 Texas was ranked #1 in highway-rail grade crossing accidents with 247 collisions, 57 injuries and 17 deaths

Federal-State Partnership for Intercity Passenger Rail will send $43.5 billion to states and provides a five-year authorization of essential public transportation programs that communities and businesses rely upon.

A STRONG voice for rail issues

TEXAS RAIL ADVOCATES SPEAKS FOR BOTH FREIGHT & PASSENGER RAIL DEVELOPMENT IN TEXAS AND THE SOUTHWEST

- Through our website
- In person before the public and private sector
- In Austin before lawmakers on rail legislation

Texas Rail Advocates is a 501c3 not for profit grass roots organization, established in Dallas in 2000.

TRA is an educational and informational resource that promotes both freight and passenger rail development throughout Texas and the Southwest.

Our Board of Directors come from diverse backgrounds. Some from within the rail industry, some from the business sector, some to advocate for rail.

www.TexasRailAdvocates.org

ACCOMPLISHMENTS

- Key stakeholder that helped establish the TxDOT Rail Division in 2009 culminating nine years of work
- Stakeholder in federally required Texas Rail Plan and Updates
- Host of Southwestern Rail Conference held each year
- Advocates for important rail issues
- Track Texas rail legislation and testify before transportation committees
- Pushed for the Texas Rail Relocation and Improvement Fund Prop 1 that passed in 2005
- Worked with elected and appointed officials to secure federal grant funding for multiple rail projects
- Participant in the I-35 and I-30 TxDOT Advisory Committee on rail issues
- Brought parties together to secure funding for Tower 55—Fort Worth rail chokepoint
- Website that reports the news on current rail issues and developments

Here's where we need your help

We've missed out on our share of over $19 BILLION in federal rail programs over the last decade. Texas should participate in federal cost-sharing rail programs for needed passenger and freight rail projects. Help us convince our leaders that Texas needs its Fair-Share-For-Rail.

BECOME A TEXAS RAIL ADVOCATES SUPPORTER

TRA
Texas Rail Advocates

800 Jaguar Lane
Dallas, Texas 75226
(214) 803-7285
peter@TexasRailAdvocates.org

RESOLUTION NO. _____

A RESOLUTION OF THE CITY COUNCIL OF THE CITY OF BIG SPRING, TEXAS IN SUPPORT OF STATE FUNDING TO MATCH COMPETITIVE FEDERAL RAIL PROGRAMS.

WHEREAS, the City of Big Spring is a Texas home rule municipal corporation; and

WHEREAS, the governing body of the City of Big Spring is the City Council of Big Spring under the Charter of the City of Big Spring, Article IV, Section 1a; and

WHEREAS, the City of Big Spring, Texas has proudly hosted railroad facilities since 1873, and the City of Big Spring is proud to say that Union Pacific continues to do so at the Big Spring Yard; and

WHEREAS, Big Spring Rail (BSR) was established on August 29, 2012 as part of an economic development project by the Big Spring Economic Development Corporation, of which the City of Big Spring is the authorizing unit, to create opportunities to transport and distribute product for customers; and

WHEREAS, BSR maintains and operates 3.3 miles of rail line in Howard County, Texas, over trackage owned by the City of Big Spring, Texas; and

WHEREAS, BSR interchanges traffic with Union Pacific just west of its Big Spring Yard and extending southward from the Toyah Subdivision; and

WHEREAS, BSR assists railroads and users of railroads in solving transportation issues ranging from the storage of products and fleets to the trans-loading of commodities, providing for logistical needs in the movement of products and materials nationwide; and

WHEREAS, BSR lines are adjacent to Big Spring McMahon-Wrinkle Airport and Industrial Park, and Big Spring is served by Interstate Highway 20 to the east and west, with Interstate Highway 27 to the north and south now authorized to run concurrently with US Highway 87 past Big Spring with both highways near BSR and the airport; and

WHEREAS, the Texas and Permian Basin economic story of which Big Spring is a part is optimistic and just beginning; and

WHEREAS, the City of Big Spring does have one rail crossing and does not have a railroad quiet zone, and due to the City budget and funding priorities, upgrades and options such as these cannot be considered without federal or state assistance; and

WHEREAS, the Federal Bipartisan Infrastructure Law (BIL), signed into law November 2021, provides for a generational investment in America's intermodal transportation needs for five years, and

WHEREAS, freight and intercity passenger rail is an integral part and engine of our economy, and

WHEREAS, funding programs to be administered by the Federal Railroad Administration will allow for rail improvement projects at the local, region and state level to move people and goods, and

WHEREAS, these projects will include eliminating and improving dangerous at-grade highway rail crossings, improve the safety, efficiency, and reliability of railroads, and

WHEREAS, programs can provide funding for track rehabilitation, elimination of rail bottlenecks and repair or replacement of aging bridges in rural rail districts, and

WHEREAS, the BIL can provide funding for the development of industrial rail parks and transload facilities in rural areas to promote economic growth and jobs, and

WHEREAS, programs can identify and develop federal-state partnerships for intercity passenger rail to restore service to towns and cities long deprived of options for surface transportation, and

WHEREAS, the State of Texas lost out on its share of over $19 billion in the last decade because there was no state match available for competitive federal grants and those funds went to other states, and

WHEREAS, Appropriated Fund 0306, the Texas Rail Relocation and Improvement Fund, approved in a constitutional amendment in 2005 but never funded, and

WHEREAS, the Rail Relocation and Improvement Fund would direct the Texas Department of Transportation and their Rail Division to be involved in the planning, programming, and construction of projects to move people and goods in our state, and

WHEREAS, the livelihood of our growing economy depends on a strong multi-modal transportation network that includes rail,

NOW, THEREFORE, BE IT RESOLVED BY THE CITY COUNCIL OF THE CITY OF BIG SPRING, TEXAS, AS FOLLOWS, THAT:

The Big Spring City Council duly convened and acting in its capacity as the governing body of the City of Big Spring, does hereby petition the State Legislature during the 2023 session to

address Texas' transportation infrastructure needs with a FAIR-SHARE-FOR-RAIL kickstart appropriation to the Rail Relocation and Improvement Fund in an amount determined by the Texas Department of Transportation as sufficient to enable the State to compete for matching funds in federal rail grant programs.

PASSED AND APPROVED on first reading at a regular meeting of the City Council on the **27th** day of **September**, **2022** with all members of the Council voting "aye" for the passage of same.

PASSED AND APPROVED on second and final reading at a regular meeting of the City Council on the **11th** day of **October**, **2022** with all members of the Council voting "aye" for the passage of same.

_____
Robert H. Moore, III, Mayor

ATTEST:

_____
Tami L. Davis, City Secretary

INTEROFFICE MEMORANDUM

Date: October 2nd, 2022

To: Todd Darden
From: Craig Ferguson, Fire Chief

Re: Capital Purchase of Ambulance

Mr. Darden,

In the budget for 2022-2023 the council approved the purchase of an Ambulance. We have gone out for quotes and have found a company we bought the last ambulance from. SERVS. They are based in Comanche Texas and have been good to work with in the past. The current bid they submitted is below budget and meets all the specs. They are a Buy Board company and this is a BuyBoard price. The BuyBoard price is $405,891.31. This ambulance come well equipped and they are saying we should have a March delivery on his unit. When it is delivered we can put it into immediate service because of the way it is outfittedand the graphs are already complete. I recommend we go with SERVS(Southern Emergency & Rescue Vehicle Sales) for the purchase of an Ambulance. This bid meets all the specs we asked for and comes with equipment needed for the operation of the truck. They can deliver the truck in the first quarter of 2023.

The price for the recommended bid is $588,758.00. we have $610,000 in the budget for this vehicle.

INTEROFFICE MEMORANDUM

Date: October 2nd, 2022

To: Todd Darden
From: Craig Ferguson, Fire Chief CF

Re: Capital Purchase of Fire Engine

Mr. Darden,

In the budget for 2022-2023 the council approved the purchase of a fire engine. We have gone out for quotes and have found four companies to bid. All four bids came within our budget. Metro Fire was the lowest bid, but they are the truck only and do not meet the spec sheet sent out. So I recommend we go with Fouts Bros Fire Equip. This bid meets all the specs we asked for and comes with equipment needed for the operation of the truck. They can deliver the truck in the first quarter of 2023.

The price for the recommended bid is $588,758.00. we have $610,000 in the budget for this vehicle.

Quotation Summary Worksheet

CITY OF BIG SPRING Purchasing Office

Project name(if available): **2022 Fire Truck**

DEPARTMENT BILLING ACCOUNT: 210-FIRE

INSTRUCTIONS FOR COMPLETION:

1) Per Purchasing Policy, purchases between $1,500 and $50,000 require at least three (3) vendor quotes, unless purchased through an existing contract, or exempt.
2) Vendor quotes must be in writing (i.e. Vendor Quotation form; Vendor email; Internet Quote, etc.) and attached to this form.
3) All awards should be made to the vendor whose proposal offers the "best value" to the City of Big Spring.
4) Awards based on "best value" may consider various factors, including but not limited to:
(a) Price / Total Cost of Ownership, (b) Product/Service Quality, (c) Availability, (d) Vendor/Product Reputation, (e) Vendor's Ability to Meet City's Needs,
(f) Client References, (g) Cooperative Contract, (h)Past Experience with City, and/or (i) any other relevant factor that ensures best value to the City.
5) Upon consideration of all factors, if all quotes meet the City's needs, the award should be made to the lowest bidder.
6) Purchases in excess of $50,000 shall be brought to Purchasing for formal solicitation.

Informal Quotes Summary

Place "X" for selected vendor:				X							
DEPARTMENT #:				VENDOR #1		VENDOR #2		VENDOR #3		VENDOR #4		VENDOR #5	
	Vendor Name:			Fouts Bros Fire Equip		US Fire Pump Company		Metro Fire Apparatus		First In Public Safety			
	Quoted By (Contact Name):			Tyler Browning		Mike Doran		Jayme Farmer		Jason Reddin			
	CITY OF BIG SPRING Vendor # (if known):												
	Email/Phone			903-491-9019		985-450-5215		432-803-4190		806-518-9571			
PRODUCT/SERVICE DESCRIPTION	ITEM	QTY	UNIT OF MEASURE	UNIT PRICE	EXTENDED PRICE	UNIT PRICE	EXTENDED PRICE	UNIT PRICE	EXTENDED PRICE	UNIT PRICE	EXTENDED PRICE	UNIT PRICE	EXTENDED PRICE
	1		ea	$ 440,000.00	$ -	$ 589,500.00	$ -	$ 562,602.00	$ -	$ 593,375.00	$ -		$ -
	2		ea	$ 148,758.00	$ -		$ -		$ -		$ -		$ -
	3		ea		$ -		$ -		$ -		$ -		$ -
	4		ea		$ -		$ -		$ -		$ -		$ -
	5		ea		$ -		$ -		$ -		$ -		$ -
	6		ea		$ -		$ -		$ -		$ -		$ -
	7		ea		$ -		$ -		$ -		$ -		$ -
	8		ea		$ -		$ -		$ -		$ -		$ -
	9		ea		$ -		$ -		$ -		$ -		$ -
	10		ea		$ -		$ -		$ -		$ -		$ -
	11		ea		$ -		$ -		$ -		$ -		$ -
	12		ea		$ -		$ -		$ -		$ -		$ -
			SUBTOTAL										
			SHIPPING COST										
			TOTALS	$ 588,758.00		$ 598,500.00		$ 562,602.00		$ 593,375.00		$ -	
	Comments			*INCLUDES ALL EQUIPMENT*		No Equipment Just Truck		No Equipment Just Truck		No Equipment Just Truck			

*** DISCLOSURE NOTICE: By signing below, I hereby certify that all quotes recorded include all the firms that have been contacted and their replies are reflected accurately on this form.**

All awards should be made based on"Best Value" to the agency. Please write a short summary below of why the vendor chosen is the best value if it is not the lowest offer.

The reason for choosing Vendor #1 is that they are offering us the truck fully equipped with all the necessary equipment and hose that would be needed to put this truck into service at a cost comparable to the other 3 companies who bid but do not include the needed equipment. This is the best value for the City and still comes under the budgeted amount.

*** Name of Person Completing this Form:** Jay Holt ***AUTHORIZING SIGNATURE:** _____ Date: _____

NOTE: THE COMPLETED & SIGNED SUMMARY SHEET AND COPIES OF ALL QUOTES MUST BE ATTACHED TO THE PURCHASE REQUISITION.

Jay Holt

From: Tyler Browning <tbrowning@foutsfire.com>
Sent: Wednesday, September 7, 2022 11:24 AM
To: Jay Holt
Subject: Fouts Bros.
Attachments: FB-94 V2 specs.pdf; Sales Drawing - Spartan - Pumper2 - 24-Aug-2022 - R01 - CV[13680].PDF; FB-94 V2 overview.pdf

Morning Jay,
It was great talking to you earlier. As we discussed, here are the specs and drawing for the stock pumper we are offering. The current price for one is $440,000 and should have one available sometime in January. After this one, we anticipate a price increase on the next batch of spartan chassis that we receive just fyi. Please feel free to call me anytime if you have any questions.

Thank you,
Tyler Browning
Texas Area Sales Rep Fouts Bros Fire
Phone: (903)491-9019
Email: tbrowning@foutsfire.com
Website: www.foutsfire.com
4495 West State Highway 71
La Grange, Texas 78945

FOUTS BROS

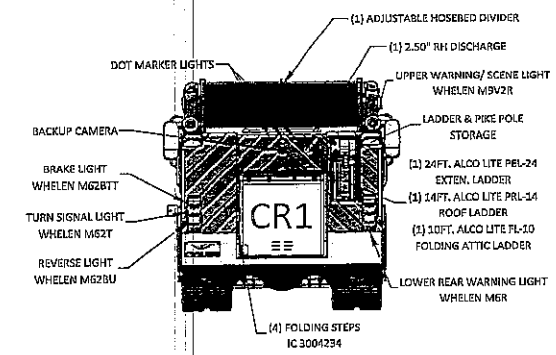

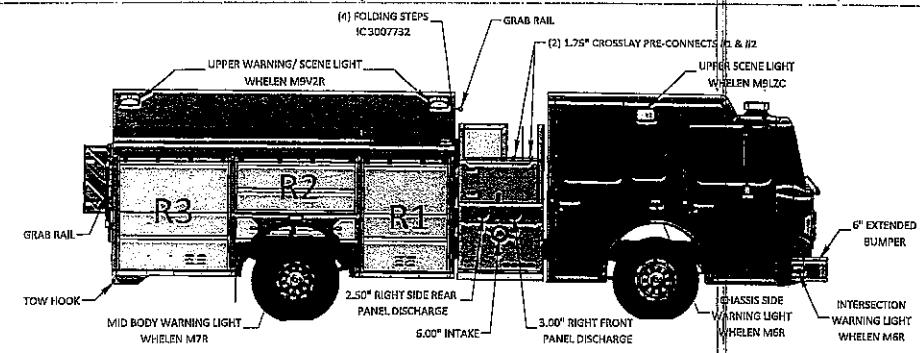

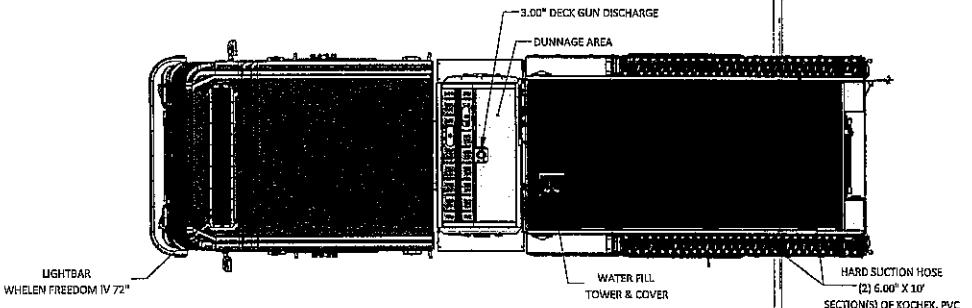

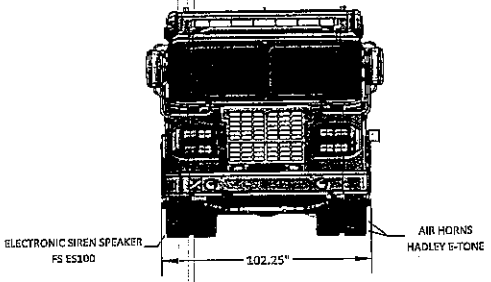

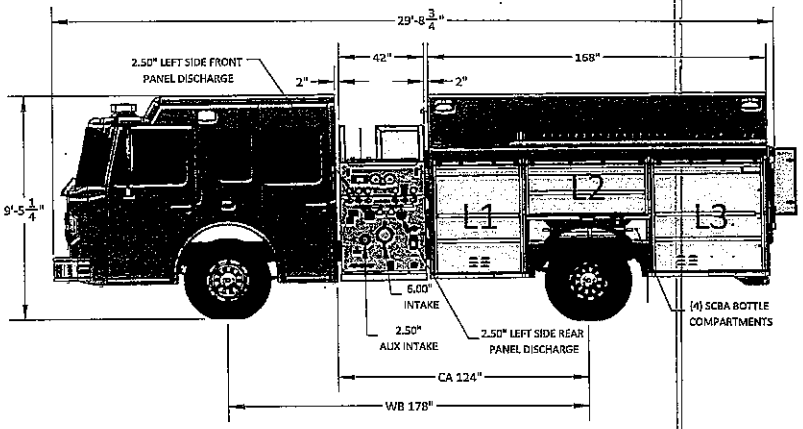

CHASSIS INFO	
CHASSIS	: SPARTAN FC-94, SINGLE AXLE
CAB	: 4 DOOR, CREW CAB
ENGINE	: CUMMINS L9 ENGINE, 380HP
TRANSMISSION	: ALLISON, 3000 EVS AUTOMATIC
FRONT AXLE	: 16,000 LBS.
REAR AXLE	: 27,000 LBS.
PAINT - PRIMARY	: SIKKENS PLNA 32557 RED
PUMP INFO	
PUMP	: HALE QMAX, 1500 GPM, SIDE MOUNT
INTAKES	
DRIVER SIDE	: (1) 6.00" & (1) 2.50" AUX
OFFICER SIDE	: (1) 6.00"
DISCHARGES	
DRIVER SIDE	: (2) 2.50"
OFFICER SIDE	: (1) 3.00" & (1) 2.50"
CROSSLAY PRECONNECT	: (2) 1.75"
RIGHT SIDE REAR	: (1) 2.50"
DECK GUN	: (1) 3.00"
PUMP MISC	
PUMP SHIFT	: STATIONARY PUMPING
PRIMING SYSTEM	: TRIDENT AIRPRIME, MANUAL
PRESSURE GOVERNOR	: FIC PUMPBOSS PBA501
WATER LEVEL GAUGE	: (1) HALE MODEL # "ITL-40R" (PUMP PANEL)
TANK TO PUMP	: (1) 3.00"
TANK REFILL	: (1) 2.00"
CROSSLAY COVER	: VINYL FLAP, RED
PUMP PANEL MATERIAL	: 14-GAUGE 304L SS BRUSHED FINISH
TANK INFO	
TANK MATERIAL	: POLYTANK
WATER CAPACITY	: 1000 US GALLONS
HOSEBED COVER	: 18 OZ. VINYL, RED
BODY INFO	
BODY TYPE	: ALUMINUM
DOOR TYPE	: AMDOR ROLL-UP DOOR
SCBA BOTTLE COMPARTMENT	: (4), ONE OVER EACH WHEEL WELL AREA
LH SIDE COMPARTMENTS	
L1	: 43.00" W x 12.00" D x 56.00" H = 17.32 CU. FT.
L2	: 59.75" W x 12.00" D x 29.00" H = 12.03 CU. FT.
L3	: 55.00" W x 12.00" D x 58.00" H = 22.15 CU. FT.
RH SIDE COMPARTMENTS	
R1	: 43.00" W x 12.00" D x 58.00" H = 17.32 CU. FT.
R2	: 59.75" W x 12.00" D x 29.00" H = 12.03 CU. FT.
R3	: 55.00" W x 12.00" D x 58.00" H = 22.15 CU. FT.
REAR COMPARTMENT	
CR1	: 44.00" W x 22.00" D x 41.00" H = 22.97 CU. FT.
TOTAL STORAGE VOLUME : 125.57 CU. FT.	
LOOSE EQUIPMENT	
SUCTION HOSES	: (2) 6.00" X 10' KOCHEK
ROOF LADDER	: (1) 14FOOT, ALCO-LITE #PRL-14
EXTENSION LADDER	: (1) 24FOOT, ALCO-LITE #PEL-24, 2 SECTION
FOLDING ATTIC LADDER	: (1) 10FOOT, ALCO-LITE #FL-10

FOUTS BROS
FOUTS BROS. INC.
135 ROBERSON MILL ROAD, MILLEDGEVILLE, GA 31061

DIMENSIONS SHOWN ARE APPROXIMATE AND SUBJECT TO CHANGE AS MAY BE FOUND NECESSARY DURING CONSTRUCTION. MINOR DETAILS MAY NOT BE SHOWN TO RETAIN CLARITY WITHIN THE DRAWING. THE DRAWING IS FOR REFERENCE PURPOSES ONLY. SPECIFICATIONS SHALL BE THE FINAL AUTHORITY OF WHAT IS SUPPLIED ON THE APPARATUS.
OVERALL HEIGHT IS IN LOADED CONDITION. UNLOADED HEIGHTS MAY BE 4" ABOVE HEIGHTS SHOWN.
THE EFFECTIVE DOOR OPENINGS WILL BE APPROX. 2" LESS THAN THE NOTED COMPARTMENT OPENING FOR ROLL UP DOORS AND UP TO APPROX. 4" LESS FOR HINGED DOORS
INCLUSION OF AN ITEM ON THE DRAWING DOES NOT CONSTITUTE INCLUSION OF THAT ITEM WITH THE FINAL DELIVERED UNIT
IN THE EVENT THERE ARE DISCREPANCIES BETWEEN THE DRAWING AND THE SPECIFICATIONS, THE SPECIFICATIONS SHALL PREVAIL

DECIMAL : ± 0.062	ENG	REV	SCALE	DWG SIZE	DATE
FRACTIONAL : ±1/16	SS	R01	1:60		24 AUG 2022
FOR :	STOCK				
TITLE :	SPARTAN - PUMPER				
PRODUCTION :	N/A				

Jay Holt

From: Mike Doran <mike@usfirepump.com>
Sent: Thursday, September 1, 2022 12:14 PM
To: Jay Holt
Subject: FW: US Fire Pump, HME Engine Specifications

Importance: High

Good Afternoon Chief Holt: as a follow-up to the previously emailed specifications, the price of the apparatus with the conditions listed below is $598,500.

Thanks again and let me know what else is needed.

Sincerely,

Mike

From: Mike Doran
Sent: Thursday, September 1, 2022 11:14 AM
To: jholt@mybigspring.com
Subject: US Fire Pump, HME Engine Specifications
Importance: High

Good Morning Chief Holt: please find the attached Engine specifications for your consideration.

: Apparatus is FOB Holden Louisiana.
: Delivery will be confirmed and is scheduled for November/December 2022.
: Any applicable taxes and vehicle registration are the responsibility of the Big Spring Fire Department
: Final Inspection will be held at the U.S. Fire Pump plant and payment in full is required at the completion of inspection and acceptance.
: Travel to the plant and expenses to return to Big Spring is the responsibility of the Fire Department, proof of insurance is also required before departure.

Thank you for the opportunity to present our proposal; once you have reviewed the information, please don't hesitate to get back to me with any questions.

Sincerely,

Mike Doran
US Fire Pump Company, LLC
Phone: (225) 209-6551
Mobile: 985-320-9791
Fax: (800) 450-5215
mike@usfirepump.com

THIS DRAWING IS AN OVERALL REPRESENTATION OF THE APPARATUS AS PROPOSED.

THE EXACT DIMENSIONS, LOCATIONS OF ACCESSORIES AND/OR COMPONENTS MAY BE REVISED PENDING COMPLETE ENGINEERING OF THE CUSTOM REQUIREMENTS OF THE INDIVIDUAL APPARATUS ORDER.

IF THERE IS A DISCREPANCY BETWEEN THE BODYBUILDER PRINT AND THE WRITTEN PROPOSAL; THE SPECIFICATIONS WITHIN THE PROPOSAL PREVAIL.

This drawing along with any changes made and initialed by both the "Fire Department" & HME, Inc. represents what will be constructed and supplied to the "Fire Department." Any changes to the contract specifications and drawing after today's date will be addressed via appropriate change order signed and approved by both the "Fire Department" & HME, Inc.

APPROVED BY: _____ TITLE: _____
FIRE DEPARTMENT

APPROVED BY: _____ TITLE: _____
HME, Incorporated

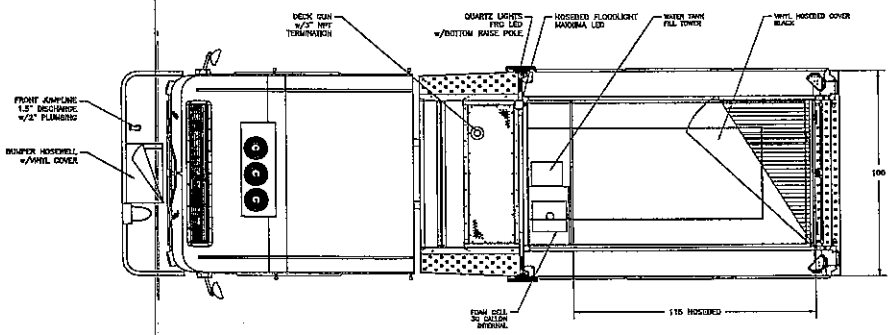

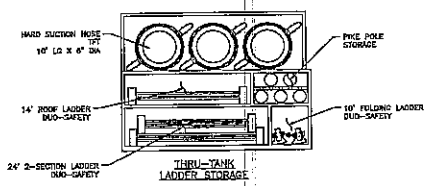

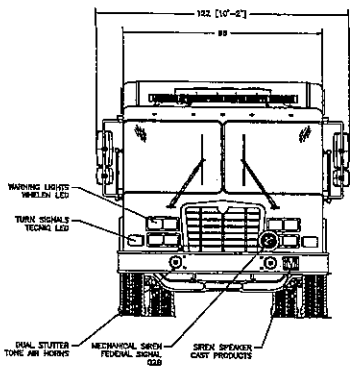

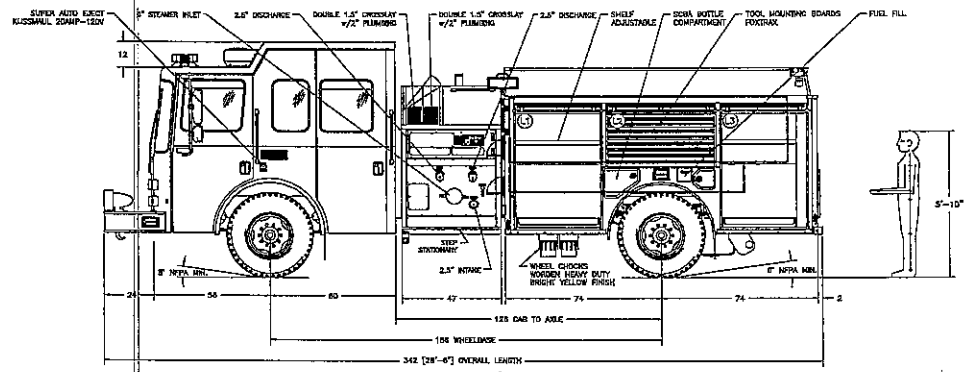

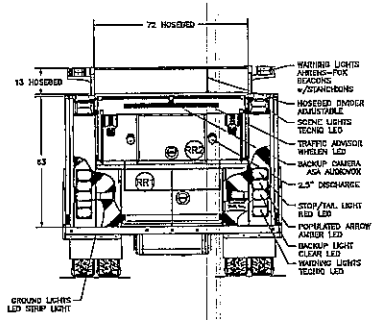

28'-6"

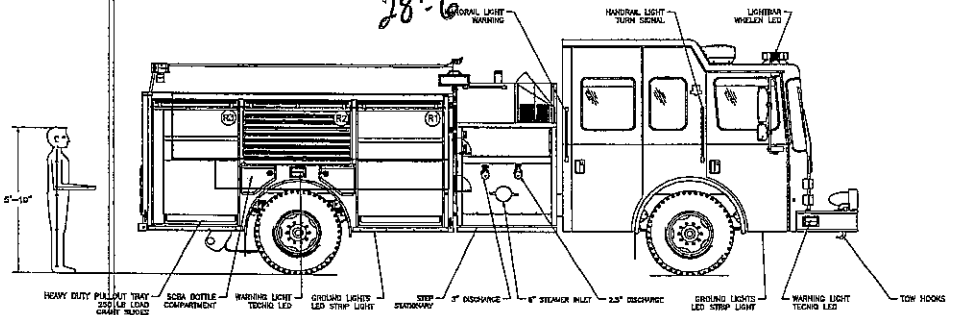

COMPARTMENTATION						
	BEHIND DOOR			CLEAR OPENING		
COMPT.	WIDTH	HEIGHT	DEPTH	DOOR WIDTH	DOOR HEIGHT	COMPT. VOLUME
L1 UPPER:	48"	33"	12"	39"	55"	11 FT³
L1 LOWER:	48"	30"	24"	39"	55"	20 FT³
L2:	52"	33"	12"	49½"	24"	11.9 FT³
L3 UPPER:	43"	33"	12"	39½"	55"	9.9 FT³
L3 LOWER:	43"	30"	24"	39½"	55"	17.9 FT³
R1 UPPER:	48"	33"	12"	39"	55"	11 FT³
R1 LOWER:	48"	30"	24"	39"	55"	20 FT³
R2:	52"	33"	12"	49½"	24"	11.9 FT³
R3 UPPER:	43"	33"	12"	39½"	55"	9.9 FT³
R3 LOWER:	43"	30"	24"	39½"	55"	17.9 FT³
RR1:	48"	29"	22"	45"	20½"	17.7 FT³

B	JC	24 JUN '22	DRAWING CHANGE
A	JC	15 DEC '22	ORIGINAL RELEASE
LET	BY	DATE	REVISION

1950 BYRON CENTER AVE.
WYOMING, MI. 49519

THIS PRINT IS PROVIDED ON A RESTRICTED BASIS AND IS NOT TO BE USED IN ANY WAY DETRIMENTAL TO THE INTERESTS OF HME, INC.

NAME: 23920 – HME SF07

DRAWN	DATE	APPROVED	DRAWING FILE
J.CROSBY	15 DEC '21	N/A	23920 – HME_SF07.DWG

SIZE	NUMBER	SCALE
B	23920	NTS

SHEET 1 OF 1

CREATED WITH AutoCAD®

598,500

METRO FIRE
Apparatus Specialists, Inc.
514 Michigan / South Houston, Texas 77587 / (713) 692-0911 / (713) 692-1591 fax

PROPOSAL

Tuesday, September 06, 2022

Big Spring Fire Department
Chief Ferguson
1401 Apron Dr,
Big Spring, TX 79720

The undersigned is prepared to furnish for you, upon an order being placed by you, for final acceptance by Metro Fire Apparatus Specialists, Inc at its office in Houston, Texas the apparatus and equipment herein named and for the following prices:

One (1) Spartan Side Control Pumper on a Metro Star Chassis and equipment as specified:

TOTAL $562,602.00

No State, Federal or local taxes included

The apparatus and equipment are to be supplied and shipped in accordance with the specifications and approvals by the **Big Spring** Fire Department. Delays due to strikes, war or other causes beyond our control not preventing, within 220 **calendar days after receipt of a signed change order A.** The completed apparatus will be delivered to you at:

Big Spring Fire Department
Big Spring, Texas

The specifications herein contained shall form a part of the final contract, and are subject to changes desired by the **Big Spring** Fire Department. The proposal specifications are supplied for construction purposes. Any additions and/or changes to the enclosed specifications shall be generated and/or approved by the **Big Spring** Fire Department, and accepted by Metro Fire Apparatus Specialists, Inc.

Unless accepted within 30 days from this date, Metro Fire Apparatus Specialists, Inc. reserves the right to withdraw this proposal.

TERMS:

By Brian Cudaback
Brian Cudaback – Apparatus Manager

Payment due upon delivery and acceptance of completed apparatus.

Compartment	Volume (Cubic Feet)
L1	36.4
L2	27.4
L3	36.4
R1	36.4
R2	27.4
R3	36.4
B1	31.2
Hose Bed Area	94.1

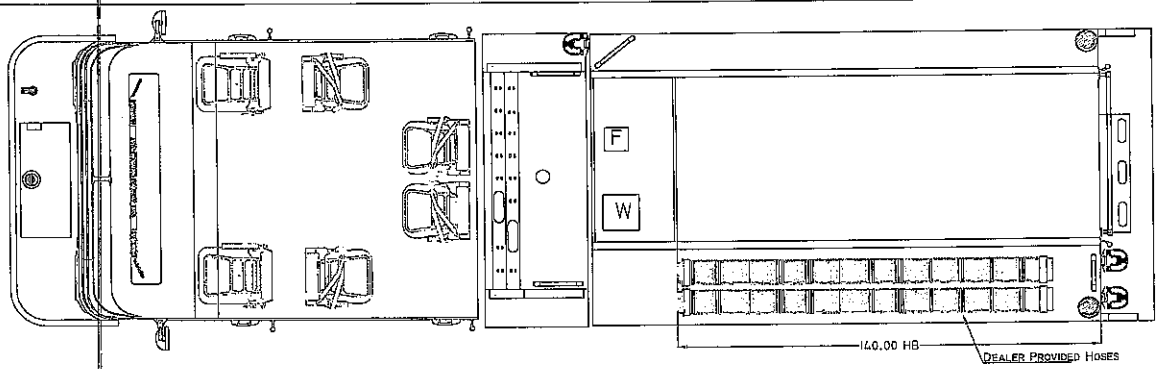

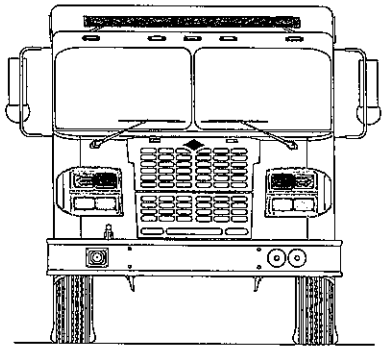

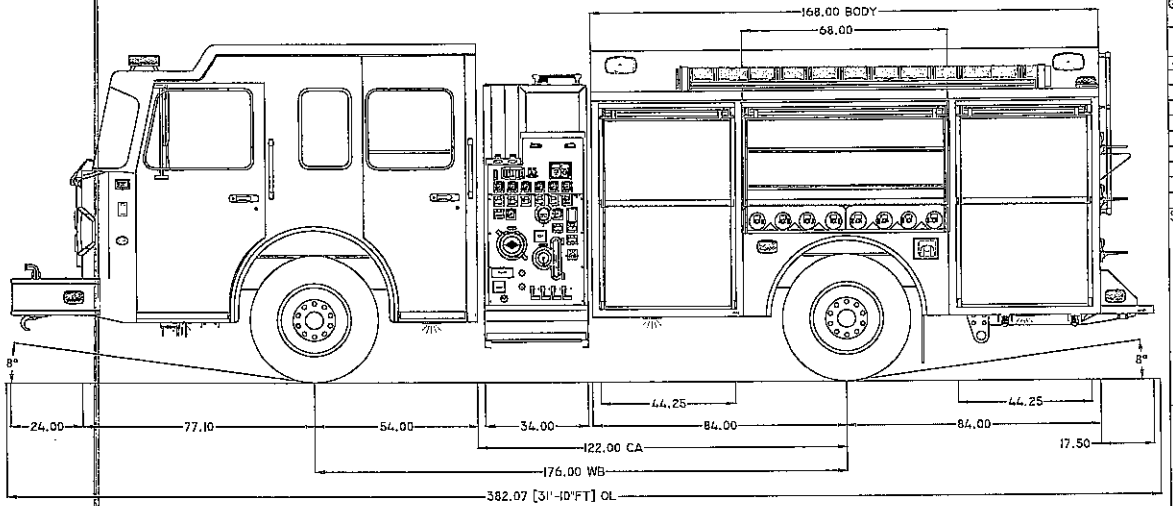

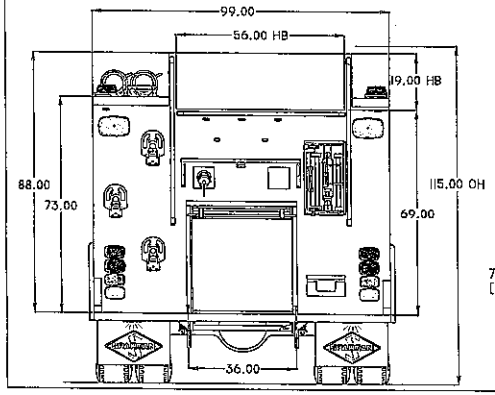

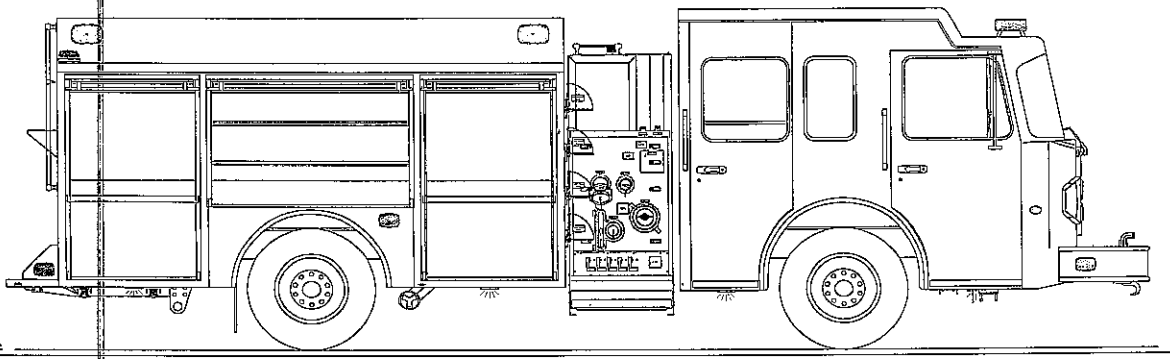

CHASSIS:	SPARTAN METRO STAR MFD 10" RR
ENGINE:	CUMMINS L9 380HP
TRANSMISSION:	ALLISON 3000 EVS
AXLES:	F 18,000 LB / R 24,000 LB
MODEL:	2108
WATER/FOAM:	1000 GALLONS / 20 GALLONS
PUMP:	HALE DSD 1500 GPM
FOAM SYSTEM:	
GENERATOR:	

DOOR FRAMED OPENINGS

COMPARTMENT	DOOR FRAMED OPENING
L1	44.25-W X 68.0-H
L2	68.0-W X 43.0-H
L3	44.25-W X 68.0-H
R1	44.25-W X 68.0-H
R2	68.0-W X 43.0-H
R3	44.25-W X 68.0-H
B1	36.0-W X 37.25-H

SPECIAL NOTES:

LADDER PACKAGE:
(1) DUO-SAFETY 24 FT.-2 SEC, 900A
(1) DUO-SAFETY 14 FT. ROOF, 775A
(1) DUO-SAFETY 10 FT. ATTIC, 585A

STORAGE FOR:
(2) 10" HARD SUCTION HOSES
(2) STANDARD HOOK PIKE POLES

CUSTOMER

THIS DRAWING IS A CLOSE APPROXIMATION OF YOUR FIRE APPARATUS. IN ALL CASES WHERE THE DRAWING AND THE WRITTEN SPECIFICATION DIFFER, THE SPECIFICATION SHALL PREVAIL. PLEASE WORK WITH YOUR DEALER TO ASSURE THAT THE WRITTEN SPECIFICATION REPRESENTS WHAT YOU WANT IN YOUR FINISHED PRODUCT. SPARTAN EMERGENCY RESPONSE BUILDS TO THE WRITTEN SPECIFICATION, NOT THE DRAWING TO ASSURE THAT YOUR NEEDS ARE MET.

PROPRIETARY AND CONFIDENTIAL

THE INFORMATION CONTAINED IN THIS DRAWING IS THE SOLE PROPERTY OF SPARTAN EMERGENCY RESPONSE. ANY REPRODUCTION IN PART OR AS A WHOLE WITHOUT THE WRITTEN PERMISSION OF SPARTAN EMERGENCY RESPONSE IS PROHIBITED. SPARTAN MOTORS USA, INC. D/B/A SPARTAN EMERGENCY RESPONSE.

REV	DATE	DESCRIPTION	NAME
1	01/31/22	UPDATE FROM -09	WC

SCALE: NOT TO SCALE

CUSTOMER:

TRUCK NUMBER: MODEL 2108-10

DEALER:

Big Spring Fire Department
New Truck
Equipment List

	Price	Total
(5) Scott X3 Pro SCBA with composite 2216 bottles	$39500	
(1) Genesis NXTGEN eForce Cutter		
(1) Genesis NXTGEN eForce Spreader		
(1) Genesis eForce 21-36 Ram		
(1) Genesis eForce 22-54 Telescopic Ram		
(1) Genesis 11C-RIT3 eForce		
(1) Genesis eForce Tips		
(1) Genesis 3 Bay Charger 120V	$46398	
(5) MES-SEEK Attack Pro TIC Cameras	$3950 ea.	$19750
(1) Removable Deck Gun with Base	$3900	
(2) TFT 2 ½" Automatic Nozzles with grips	$1600 ea.	$3200
(4) TFT 1 ½ Automatic Nozzles with Grips	$1450 ea.	$5800
(1000ft) 5" Yellow LDH for hosebed	$1100 ea.	$11000
(500ft) 2 ½" Red Double Jacket Polyester Hose for hosebed	$380 ea.	$3800
(200ft) 1 ¾" Red Double Jacket Polyester Hose for crosslay	$280 ea.	$1120
(200ft) 1 ¾" White Double Jacket Polyester Hose for crosslay	$280 ea.	$1120
(1) 5-way Manifold	$2800	
(1) Akron Revolution Intake Valve	$2955	
(1) Hose Ringer	$495	
(1) Hydrant Pack with spanners and hydrant wrench	$470	
(2) Storz spanner sets with mounts	$315 ea.	$630
(3) wrench holder SETS with spanners and hydrant wrenches	$315 ea.	$945
(2) 30" Halligan Bars	$395 ea.	$790
(1) 36" Pick Axe	$190	
(1) 36" Flat Axe	$190	
(1) 36" 10lb sledge hammer	$180	
(1) 10' hollow core pike pole	$195	
(1) 6' D handle American hook	$205	
(2) 2 ½ to 1 ½ Reducers	$90 ea.	$180
(1) 2 ½ Cap	$95	
(5) 2 ½ Double Females	$180 ea.	$900
(5) 2 ½ Double Males	$80 ea.	$400
(2) 2 ½"x 1 ¾" Gated Y's	$775 ea.	$1550

total: $148,758.00

INTEROFFICE MEMORANDUM

Date: October 2nd, 2022

To: Todd Darden
From: Craig Ferguson, Fire Chief

Re: Capital Purchase of Ambulance

Mr. Darden,

In the budget for 2022-2023 the council approved the purchase of an Ambulance. We have gone out for quotes and have found a company we bought the last ambulance from. They are based in Comanche Texas and have been good to work with in the past. The current bid they submitted is below budget and meets all the specs. The BuyBoard price is $405,891.31. This ambulance comes well equipped, and they are saying we should have a March delivery on this unit. When it is delivered, we can put it into immediate service because of the way it is already upfitted.

I recommend we go with SERVS (Southern Emergency & Rescue Vehicle Sales) for the purchase of an Ambulance. This bid meets all the specs we asked for and comes with equipment needed for the operation of the truck. They can deliver the truck in the first quarter of 2023.

The price for the recommended bid is $405,891.31. We have $410,000 in the budget for this vehicle.

INTEROFFICE MEMORANDUM

Date: October 2nd, 2022

To: Todd Darden
From: Craig Ferguson, Fire Chief

Re: Capital Purchase of Ambulance

Mr. Darden,

In the budget for 2022-2023 the council approved the purchase of an Ambulance. We have gone out for quotes and have found a company we bought the last ambulance from. They are based in Comanche Texas and have been good to work with in the past. The current bid they submitted is below budget and meets all the specs. The BuyBoard price is $405,891.31. This ambulance comes well equipped, and they are saying we should have a March delivery on this unit. When it is delivered, we can put it into immediate service because of the way it is already upfitted.

I recommend we go with SERVS (Southern Emergency & Rescue Vehicle Sales) for the purchase of an Ambulance. This bid meets all the specs we asked for and comes with equipment needed for the operation of the truck. They can deliver the truck in the first quarter of 2023.

The price for the recommended bid is $405,891.31. We have $410,000 in the budget for this vehicle.

Southern Emergency & Rescue Vehicle Sales
309 FM 3381
Comanche, Texas 76442
Main: (800) 561-6070 Direct: (325) 356-2233

SERVS

SALES AGREEMENT

Customer:	City of Big Spring Fire Dept.	Date:	9/21/2022
Contact:	Jay Holt	Sales Rep:	Michael Jordan
Address:	1401 Apron Drive		
City/State/ZIP:	Big Spring, TX 79720	Ref. #	AEV Quote #10037-0013
Phone:	432.264.2303		

N/U	STOCK #	MFR	CONV YEAR	MAKE	MODEL	TYPE	DIMENSIONS	QTY	PRICE	EXTENSION
New	TBD	AEV	2023	AEV	X-Series	I	172"X96"X72"	1	$289,578.00	$289,578.00

ADDITIONAL INFORMATION	EXTRAS/OPTIONS	PRICE	QTY	EXTENSION
Damage:	2023 - Ford F-550, 4x4, 6.7l Turbo Diesel, 193" W/B, OEM Back up Camera *(CHASSIS*	$70,000.00	1	
Warranty: OEM / AEV Standard	***PRICE IS ESTIMATE ONLY. Ford has not released 2023 chassis prices at this time.***	Incl		
Licensing:	Custom AEV X-Series, Type I, 172" X 95" X 72", Rear Liquid Spring Suspension;	Incl		
Tax Status: Exempt	Stryker Power Load, Pro Air Ducted HVAC tied to a separate 12volt belt driven	Incl		
GPC/FIN:	Secondary AC compressor, Arctic Wedge Condenser;	Incl		
Licensing:	110v Danhard Shoreline HVAC system, Vanner 1100w Puresine Inverter;	Incl		
	KnoxBox Medvault, Electric Privacy Windows; 360 degree Brigade Camera Sys;	Incl		
	Cabinet Restocking Feature, Multiplex LX1 Touchscreen Electrical System;	Incl		
	Whelen M-Series Emergency Lighting, Whelen Siren, Skirt and Ground Lighting;	Incl		
	Aluminum Cabinetry with Solid Surface Counter Tops, Custom KMP Graphics;	Incl		
	Final Inspection @ AEV Factory, & Delivery;	Incl		
	Zoll X-Series "*Advanced*" Cardiac Monitor *(Zoll Quote Q-41077 v1 Attached)*	$46,313.31		
	TOTAL EXTRAS:	**$116,313.31**		
Other: Plan for a visit to the AEV factory for a final "pre-delivery" inspection for two people. Once approved the ambulance will be shipped to Comanche for graphics install and final pre-delivery inspection.	**TOTAL INCLUDING ALL EXTRAS:**	**$405,891.31**	1	**$405,891.31**

TRADE-IN		TAXES & FEES	
Year:	N/A	Sales Tax:	Exempt
Make & Model:		State Fees:	
VIN:		Title/License Fee:	Included
		Delivery:	Included
TRADE ALLOWANCE:	**N/A**	**TOTAL TAXES & FEES:**	**$0.00**

TOTAL INCL EXTRAS:	$405,891.31
Ford GPC Discount	
TOTAL DELIVERY,TAXES & FEES:	$0.00
GRAND TOTAL:	$405,891.31
DEPOSIT REQUIRED:	$0.00
AMOUNT DUE	$405,891.31

NOTICE TO BUYER

This contract is subject to additional provisions set forth, which is incorporated here by inference, and which terms include a complete disclaimer of all warranties other than stated by Manufacturer. The purchaser agrees that this order includes all the terms and conditions of this order and that this order cancels and supersedes any prior agreement as of the date hereof comprises the complete exclusive statement of the terms of the agreement; relating to the subject matters covered hereby, and that this order shall NOT BECOME BINDING until accepted by the Dealer principal or his/her authorized representative. Purchaser by his/her execution of this order acknowledges that he/she has read the terms and conditions and has received a copy of the Buyer's Order. Payment is due for all ambulances at delivery or prior to release for delivery from factory. Final price is subject to change. Critical industry circumstances caused by a unique mixture of issues stemming from pandemic relates surges in the ambulance market, increases in customer demand and severe labor and supply shortages have created unprecedented challenges. These issues and pent-up demand of orders has caused ambulance lead times to increase to three (3) and four (4) times the norm. Routine pricing and quoting practices for ambulances has evolved into a *"best estimate"*. For these reasons, SERVS will employ the Force Majeure option for ALL ambulance contracts and orders. If the purchased vehicle(s) sold to purchase by dealer under this order is sold as a used or pre-owned vehicle, the unit is sold "AS IS" and "WITH ALL FAULTS". Dealer makes no guarantee of any nature whatsoever in connection with the purchased of used vehicle(s), expressed or implied, (including no warranty that the odometer represents the actual mileage) or any implied such mileage.

TITLE INFORMATION

Name & address on title should read:
Physical address of vehicle (for 130-U)):
Lien holder name & address (if any):
Date of Sale required by Lien holder:

AUTHORIZED SIGNATURES

Company: City of Big Spring Fire Department

Purchase By: _____ (Name (Printed)) _____ (Title) _____ (Signature) _____ (Date)

Dealer: Southern Emergency Rescue & Vehicle Sales (SERVS)

_____ Territory Manager Signature _____ Dealer Principal Signature 9/21/2022 Date

THANK YOU FOR YOUR BUSINESS! WE APPRECIATE THE OPPORTUNITY TO BE OF SERVICE TO YOU ! The *SERVS* Team

ZOLL Medical Corporation
269 Mill Road
Chelmsford, MA 01824-4105
Federal ID# 04-2711626

Phone: (800) 348-9011
Fax: (978) 421-0015
Email: esales@zoll.com

Quote No: Q-41077 Version: 1

Professional Ambulance Sales & SERV LLC
c/o Big Spring Fire Department
309 FM 3381
Commanche, TX 76442

ZOLL Customer No: 100701

Michael Jordan
michael.j@servsllc.com

Quote No: Q-41077
Version: 1

Issued Date: September 16, 2022
Expiration Date: September 30, 2022

Terms: NET 30 DAYS

FOB: Destination

Freight: Free Freight

Prepared by: Lavern Smith
EMS Territory Manager
lsmith@zoll.com
+1 5054177965

Item	Contract Reference	Part Number	Description	Qty	List Price	Adj. Price	Total Price
1	949804	601-2221112-01	**X Series Advanced Monitor/Defibrillator - 12-Lead ECG, Pacing, SpO2, EtCO2, BVM, NIBP, CPR Expansion Pack, Remote View** Includes: TBI Dashboard, 4 trace tri-mode display monitor/ defibrillator/ printer, advisory algorithm, advanced communications package (Wi-Fi, Bluetooth, USB cellular modem capable) USB data transfer capable and large 6.5in (16.5cm) diagonal screen. Accessories Included: MFC cable and CPR connector, A/C power cord, One (1) roll printer paper, 6.6 Ah Li-ion battery, Operators Manual, Quick Reference Guide, and One (1)-year EMS warranty. Parameter Details: Real CPR Help - Dashboard display of CPR Depth and Rate for Adult and Pediatric patients, Visual and audio prompts to coach CPR depth (Adult patient only), Release bar to ensure adequate release off the chest, Metronome to coach rate for Adult and Pediatric patients. See-Thru ® CPR artifact filtering • Interpretative 12-Lead ECG (Full 12 ECG lead view with both dynamic and static 12-lead mode display. 12-Lead OneStep ECG cable - includes 4-Lead limb lead cable and removable precordial 6-Lead set) • ZOLL Noninvasive Pacing Technology • Real BVM Help: Dashboard provides real-time ventilation feedback on both volume and rate for intubated and non-intubated patients. AccuVent Cable included. (Accuvent disposable sensors sold separately) • Welch Allyn NIBP with Smartcuff. 10 foot Dual Lumen hose and SureBP Reusable Adult Medium Cuff • Masimo Pulse Oximetry with Signal Extraction Technology (SET), Rainbow SET® • EtCO2 Oridion Microstream Technology. Microstream tubing set sold separately •	1	$45,952.00	$35,508.11	$35,508.11
2	949804	8300-000676	**OneStep Cable, X Series**	1	$506.00	$348.07	$348.07

ZOLL Medical Corporation
269 Mill Road
Chelmsford, MA 01824-4105
Federal ID# 04-2711626

Phone: (800) 348-9011
Fax: (978) 421-0015
Email: esales@zoll.com

Professional Ambulance Sales & SERV LLC
Quote No: Q-41077 Version: 1

Item	Contract Reference	Part Number	Description	Qty	List Price	Adj. Price	Total Price
3	949804	8009-0020	**CPR-D-padz and CPR Stat Padz Connector for R Series**	1	$438.00	$279.56	$279.56
4	949804	8900-000219-01	**OneStep Pediatric CPR Electrode (1 pair)**	1	$104.00	$75.34	$75.34
5		8000-001128	**Accuvent Flow Tube (Box of 10)**	1	$708.00	$708.00	$708.00
6	949804	8000-0895	**Cuff Kit with Welch Allyn Small Adult, Large Adult and Thigh Cuffs**	1	$173.00	$133.87	$133.87
7	949804	8000-001392	**Masimo rainbow® RC-4 - 4FT, Reusable EMS Patient Cable**	1	$278.00	$200.90	$200.90
8	949804	8000-000371	**rainbow® DCI® SpO2/SpCO/SpMet Adult Reusable Sensor with connector (3 ft)**	1	$957.00	$676.00	$676.00
9	949804	8000-000372	**rainbow® DCI-P® SpO2/SpCO/SpMet Pediatric Reusable Sensor**	1	$957.00	$676.00	$676.00
10	949804	8000-0580-01	**Six hour rechargeable Smart battery**	2	$572.00	$421.00	$842.00
11	949804	8200-000100-01	**Single Bay Charger for the SurePower and SurePower II batteries**	1	$1,124.00	$704.50	$704.50
12	949804	8000-000876-01	**Paper, Thermal, w/Grid, BPA Free (Box of 6)**	1	$27.00	$19.66	$19.66
13		8000-000393-01	**X Series Carry Case, Premium**	1	$385.00	$385.00	$385.00
14		8400-110041	**CaseReview Premium Subscription, R Series and X Series, 1 Year- Hosted** Provides detailed post-case information, including CPR quality on compression depth, rate, pause time and release velocity, as well as ECG, shocks, EtCO2 and SpO2 vital signs.	1	$561.00	$561.00	$561.00
15		8400-110071	**Remote View for X Series, AWS hosted software solution, 1 year subscription**	1	$985.00	$985.00	$985.00

Subtotal: $42,103.01

Total: $42,103.01

Contract Reference	Description
949804	Reflects GPO Npp 2020 - Contract No. PS20200 contract pricing. Notwithstanding anything to the contrary herin, the terms and conditions set forth in NPP 2020 - Contract No. PS20200 shall apply to the customer's purchase of the products set forth on this quote.

ZOLL Medical Corporation
269 Mill Road
Chelmsford, MA 01824-4105
Federal ID# 04-2711626

Phone: (800) 348-9011
Fax: (978) 421-0015
Email: esales@zoll.com

Professional Ambulance Sales & SERV LLC
Quote No: Q-41077 Version: 1

To the extent that ZOLL and Customer, or Customer's Representative have negotiated and executed overriding terms and conditions ("Overriding T's & C's"), those terms and conditions would apply to this quotation. In all other cases, this quote is made subject to ZOLL's Standard Commercial Terms and Conditions ("ZOLL T's & C's") which for capital equipment, accessories and consumables can be found at https://www.zoll.com/about-zoll/invoice-terms-and-conditions and for software products can be found at http://www.zoll.com/SSPTC and for hosted software products can be found at http://www.zoll.com/SSHTC. Except in the case of overriding T's and C's, any Purchase Order ("PO") issued in response to this quotation will be deemed to incorporate ZOLL T's & C's, and any other terms and conditions presented shall have no force or effect except to the extent agreed in writing by ZOLL.

1. This Quote expires on September 30, 2022. Pricing is subject to change after this date.
2. Applicable tax, shipping & handling will be added at the time of invoicing.
3. All purchase orders are subject to credit approval before being accepted by ZOLL.
4. To place an order, please forward the purchase order with a copy of this quotation to esales@zoll.com or via fax to 978-421-0015.
5. All discounts from list price are contingent upon payment within the agreed upon terms.
6. Place your future accessory orders online by visiting www.zollwebstore.com.

Order Information (to be completed by the customer)

[ ] Tax Exempt Entity (Tax Exempt Certificate must be provided to ZOLL)

[ ] Taxable Entity (Applicable tax will be applied at time of invoice)

BILL TO ADDRESS	SHIP TO ADDRESS
Name/Department:	Name/Department:
Address:	Address:
City / State / Zip Code:	City / State / Zip Code:

Is a Purchase Order (PO) required for the purchase and/or payment of the products listed on this quotation?

[ ] Yes PO Number: _____ PO Amount: _____
(A copy of the Purchase Order must be included with this Quote when returned to ZOLL)

[ ] No (Please complete the below section when submitting this order)

For organizations that do not require a PO, ZOLL requires written execution of this order. The person signing below represents and warrants that she or he has the authority to bind the party for which he or she is signing to the terms and prices in this quotation.

Professional Ambulance Sales & SERV LLC
Authorized Signature:

_____

Name: _____

Title: _____

Date: _____

ZOLL Medical Corporation
269 Mill Road
Chelmsford, MA 01824-4105
Federal ID# 04-2711626

Phone: (800) 348-9011
Fax: (978) 421-0015
Email: esales@zoll.com

Professional Ambulance Sales & SERV LLC
Quote No: Q-41077 Version: 1

ALS/BLS Software Solutions Master Application Service Provider Agreement

1. **Orders.** ZOLL Medical Corporation (**"ZOLL"**) shall provide the ASP Services, Implementation Services and Support Services identified in any order or contract (**"Order"**) between ZOLL and another party (**"Customer"**) incorporating this Software Solutions Master Application Service Provider Agreement (together with each such Order, the **"Agreement"**). ASP Services are further defined in Section 3. Implementation Services are further defined in Section 4. Support Services are further defined in Section 5. The ASP Services, Implementation Services, and Support Services are each, and are collectively, **"Services"**. The terms and conditions set forth in this Agreement shall only apply to ALS/BLS Software Solutions products that are used with ZOLL Medical Corporation defibrillators. For the sake of clarity, these terms and conditions do not apply to any ZOLL patient care reporting software.

2. **Payment.** Customer shall pay fees to ZOLL for Services as provided in any Order and this Agreement (**"Fees"**). Unless otherwise provided in the applicable Order, Customer will pay ZOLL all Fees due under this Agreement within thirty (30) days after the date of ZOLL's invoice. The first invoice will be sent after the Deployment Effective Date. "Deployment Date" means the date upon which the deployment of the ASP Services is complete and it is able to function as described in the warranty set forth in this Agreement, regardless of whether Customer actually uses such ASP Services. "Deployment Effective Date" means the earlier of (a) the Deployment Date or (b) 90 days from the date after ZOLL's shipment of defibrillators that are included on the Order (the "Latest Deployment Date"), unless a delay in the Deployment Date has been caused by ZOLL, in which case the Deployment Effective Date shall be postponed by a number of days equal to the delay that ZOLL has caused. Fees are non-refundable other than as expressly set forth herein. Amounts not paid when due will accrue interest at the rate of 1.5% per month, or the maximum allowed by law, whichever is less. Customer shall pay all expenses (including reasonable attorney's fees) incurred by ZOLL in connection with collection of late payments. Any amounts not paid by Customer when due may result in the forfeiture by Customer, in ZOLL's sole discretion, of any discounts previously offered by ZOLL. In addition, ZOLL may cease providing any or all of the Services if any invoice is not paid in a timely manner, in which event ZOLL will not be liable to Customer for any damages caused by such cessation. Payment terms are subject to ZOLL's credit approval. Fees exclude all applicable sales, use and other taxes and all applicable export and import fees, customs duties and similar charges (**"Taxes"**).

3. **ASP Services.** "ASP Services" means the hosting and maintenance of ZOLL software, as modified, updated, and enhanced (the **"Underlying Software"**), for remote electronic access and use by Registered Users on the website with a unique URL to be provided by ZOLL to Customer (the **"ZOLL Site"**) in substantial conformity with the instructions for use, documentation and users manuals from time-to-time provided by ZOLL (the **"Documentation"**), as listed in any Order, on and after the Implementation Date (defined below) for such services and before that Order has expired or been terminated in accordance with the Agreement. Customer acknowledges that the ASP Services are only compatible with ZOLL equipment that has been enabled and configured for use with the ASP Services in accordance with the Documentation and only with the browser and other technical environment that supports the use of the ASP Services in accordance with the Documentation.

3.1. Provision of ASP Services. Subject to the terms and conditions of the Agreement, ZOLL will use commercially reasonable efforts to make the ASP Services available to Customer and Customer's employees, directors, principals, partners, consultants and agents authorized to use ASP Services on behalf of Customer and registered through the ZOLL Site for such use (**"Registered Users"**) through the ZOLL Site over normal network connections in accordance with the Documentation, excepting downtime due to necessary maintenance and troubleshooting. Customer, not ZOLL, shall be responsible for controlling Registered Users and protection of confidentiality of its login identifications and passwords. Customer acknowledges that (i) it is responsible for maintaining its interface and connectivity to the ASP Services and (ii) any facilities used for provision of the ASP Services may be owned or operated by ZOLL, or a ZOLL affiliate or a third party, or any combination of such facilities, as determined by ZOLL. Customer acknowledges that ZOLL may modify and upgrade the ASP Services, on an ongoing basis, to improve or adapt the ASP Services. Without limiting the foregoing, ZOLL will have the right, in its sole discretion, to develop, provide and market new, upgraded or modified ASP Services to Customer, including adding, removing or modifying the functionality or features of the ASP Services accessible by Registered Users. ZOLL will use commercially reasonable efforts to notify Customer within a reasonable period of time prior to the implementation of such changes so that Customer is reasonably informed of alterations to the ASP Services that will affect the ASP Services and Customer's use of them. Notwithstanding anything to the contrary in the Agreement, ZOLL may cease providing any ASP Services upon at least six months advance notice to Customer.

3.2. Access Software. Subject to the terms and conditions of this Agreement, ZOLL grants to Customer, during the Term, a non-exclusive, non-transferable, non-sublicensable license for Registered Users to access and use the ASP Services using the ZOLL software that Registered Users may download at the ZOLL Site to access the ASP Services, as modified, updated and enhanced (the **"Access Software"**), each as made available to Customer through the ZOLL Site, solely for Customer's internal business purposes and solely in accordance with the Documentation. Access Software and Underlying Software are, collectively, the **"Software"**.

3.3. Restrictions. Customer shall not, and shall not permit any third party to: (a) use, reproduce, modify, adapt, alter, translate or create derivative works from the ASP Services, Software or Documentation; (b) merge the ASP Services, Software or Documentation with other software or services; (c) sublicense, distribute, sell, use for service bureau use, lease, rent, loan, or otherwise transfer or allow access to the ASP Services, Software or the Documentation to any third party; (d) reverse engineer, decompile, disassemble, or otherwise attempt to alter or derive the Source Code for the ASP Services or Software; (e) remove, alter, cover or obfuscate any copyright notices or other proprietary rights notices included in the ASP Services, Software or Documentation; or (f) otherwise use or copy the ASP Services, Software or Documentation in any manner not expressly permitted by the Agreement. Customer agrees not to use the ASP Services in excess of its authorized login protocols. Customer shall immediately notify ZOLL of any unauthorized use of Customer's login ID, password or account or other breach of security. If Customer becomes aware of any actual or threatened activity contemplated by the restrictions on use set forth in this section, Customer will, and will cause Registered Users to, immediately take all reasonable measures necessary to stop the activity or threatened activity and to mitigate the effect of such activity including: (i) discontinuing and limiting any improper access to any data; (ii) preventing any use and disclosure of improperly obtained data; (iii) destroying any copies of improperly obtained data that may have been made on their systems; (iv) otherwise attempting to mitigate any harm from such events; and (v) immediately notifying ZOLL of any such event so that ZOLL may also attempt to remedy the problem and prevent its future occurrence.

3.4. Service Level Agreement.

3.4.1. Downtime. **"Downtime"**, expressed in minutes, is any time the ASP Services are not accessible to Registered Users.

3.4.2. Planned Downtime. **"Planned Downtime"** is Downtime during which ASP Services may not be available in order for ZOLL to continue to provide commercially reasonable services, features and performance to its customers. Planned Downtime includes, but is not limited to: (a) Standard Maintenance; and (b) Emergency Maintenance. **"Standard Maintenance"** is performed when upgrades or system updates are desirable. **"Emergency Maintenance"** is performed when a critical system update must be applied quickly to avoid significant Downtime. Standard Maintenance may be performed weekly on Monday and Wednesday between the hours of 7 p.m. to 11 p.m. in Broomfield, Colorado. ZOLL will provide Customer with notice at least 24 hours in advance of Standard Maintenance.

3.4.3. Excused Downtime. "**Excused Downtime**" time is Downtime caused by: (a) services, software or hardware provided by anyone or any entity other than ZOLL, (b) software, services or systems operating outside of a ZOLL Site, including any software or systems operating on a Customer's premises (including ZOLL software); (c) a Force Majeure Event or (d) Customer's failure to comply with its obligations under the Agreement or use of the ASP Services in ways that were not intended.

3.4.4. Unplanned Downtime. Unplanned Downtime in a calendar month is expressed as a percentage calculated as follows:

$$\frac{\text{(Downtime - (Planned Downtime + Excused Downtime))}}{\text{Total number of minutes in the calendar month}} \times 100 = x\ \%, \text{ where "x" is Unplanned Downtime.}$$

3.4.5. Unplanned Downtime Goal. ZOLL shall provide the ASP Services such that there is less than 1% of Unplanned Downtime in a calendar month (the "**Unplanned Downtime Goal**"). The ASP Services covered by the Unplanned Downtime Goal are those for which Customer has paid all Fees when due and is using in the course of carrying out its normal business operations in accordance with the Agreement.

3.4.6. Revocation of Administrative Rights. Notwithstanding anything to the contrary in the Agreement, ZOLL may revoke administrative rights, including database access rights, if the use of any such rights results in Downtime.

3.4.7. Customer Content; Security; Backup.

3.4.7.1. Customer Content. As between ZOLL and Customer, and without limiting the rights of any patient, Customer will retain all right, title and interest in and to all data, information or other content provided by Customer in its use of the ASP Services ("**Customer Content**"); *provided, however,* that ZOLL may de-identify and use Customer Content for any lawful purpose consistent with all applicable law.

3.4.7.2. Security. Subject to Customer's obligations under this Agreement, ZOLL will implement commercially reasonable security measures within the ASP Services in an attempt to prevent unlawful access to Customer Content by third parties. Such measures may include, where appropriate, use of updated firewalls, commercially available virus screening software, logon identification and passwords, encryption, intrusion detection systems, logging of incidents, periodic reporting, and prompt application of current security patches and virus definitions.

3.4.7.3. Backup of Customer Content (Not Applicable to Remote View). Although ZOLL will use commercially reasonable efforts to maintain the integrity of the Customer Content, to back up the Customer Content, and to provide full and ongoing access to the ASP Services, loss of access to the ASP Services and loss of Customer Content may occur. Customer will make provision for additional back-up storage of any critical Customer Content and shall be responsible for compliance with all records retention requirements applicable to Customer. ZOLL will not be responsible for any loss, corruption of or inaccessibility of the Customer Content due to interruption in the ASP Services or otherwise arising out of circumstances not within ZOLL's control.

3.4.7.4. Availability of Customer Content (Not Applicable to Remote View). It is Customer's responsibility to maintain any Customer Content that it requires for archival purposes, ongoing management of its operations and compliance with applicable records retention requirements. Unless specified otherwise in the Agreement, ZOLL will store Customer Content, other than Inactive Customer Content as defined below (the "**Active Customer Content**"), in ZOLL's working data set until the earlier of (i) five years (calculated from the date of creation of such Customer Content, or ZOLL's receipt of such Customer Content, whichever is later) or (ii) the expiration or termination of this Agreement or the Order under which such Active Customer Content was stored (the "**Active Retention Period**"). Upon the expiration of the Active Retention Period, ZOLL will notify Customer in writing and will provide Customer the option, which Customer shall exercise by informing ZOLL in writing, within 30 days of receiving the notice, that either (a) Customer wishes to receive Active Customer Content in a database determined by ZOLL in its sole and absolute discretion (a "**Database**"), or (b) Customer will pay ZOLL, at ZOLL's then-current storage rates and upon ZOLL's then-current terms and conditions, to continue to store the Active Customer Content. If Customer fails to exercise one of the foregoing options within such 30-day period, ZOLL will have the right to destroy the Active Customer Content. During the time ZOLL stores Customer Content for Customer hereunder, ZOLL may periodically identify Customer Content that has had no activity associated with it for at least 180 days ("**Inactive Customer Content**") and will notify Customer in writing of its intent to remove the Inactive Customer Content from ZOLL's working data set and destroy such data, unless Customer requests, in writing, within 30 days of receiving the notice from ZOLL, that either (z) Customer wishes to receive the Inactive Customer Content in a Database, or (y) Customer will pay ZOLL, at ZOLL's then-current storage rates and upon ZOLL's then-current terms and conditions, to continue to store such Inactive Customer Content. If Customer fails to exercise one of the foregoing options within such 30-day period, ZOLL will have the right to destroy the applicable Inactive Customer Content in its possession or under its control. Except for this Section 3.4.7.4, the terms of Section 3.4 (including, without limitation, the Unplanned Downtime Goal) do not apply to Customer's access of Inactive Customer Content. Customer represents, warrants and agrees that it (A) is solely responsible for determining the retention period applicable to it with respect to Customer Content maintained by ZOLL; (B) has consulted with or has had the opportunity to consult with legal, information governance or records management professionals; and (C) is not relying upon ZOLL to assist with determining the records maintenance or retention requirements applicable to it.

3.4.8. Remedies. A "**Service Credit**" means a percentage of the monthly Fee to be credited to Customer (subject to Customer's written request therefor and ZOLL's verification thereof) for any ASP Service for which the Unplanned Downtime Goal is exceeded in a calendar month. For any calendar month where the aggregate total of Unplanned Downtime for any ASP Service exceeds one percent ZOLL will provide a 10% Service Credit towards Customer's monthly Fee for such ASP Service that was affected; *provided, that* Customer (i) requests such Service Credit in writing within 30 days of the end of the calendar month in which such Unplanned Downtime occurred, (ii) includes in such request the nature of, and date and time of such Unplanned Downtime and (iii) such Unplanned Downtime is verified by ZOLL. Such Service Credit will be applied to a future month's invoice for such ASP Services, which typically is two months later. Failure to submit a written request for Service Credit as provided in this Section 3.4.8 shall constitute a waiver of such Service Credit by Customer. Further, Service Credits shall not be issued if Customer is not current on all Fees due and payable. The remedy set forth in this Section 3.4.8 shall be the Customers' sole and exclusive remedy with respect to ZOLL exceeding the Unplanned Downtime Goal.

3.4.9. Modifications. Changes to this Section 3.4 may be made from time to time at ZOLL's sole discretion. Customer will be notified of any such changes that are material.

4. Implementation Services. ZOLL shall provide ASP Services implementation, training and any related services identified in an Order (the "**Implementation Services**"). Customer shall, in a timely manner and at its own expense, cooperate and provide or make available to ZOLL access to the Customer's premises, systems, telephone, terminals and facsimile machines and all relevant information, documentation and staff reasonably required by ZOLL to enable ZOLL to perform the Implementation Services. Customer acknowledges that any time frames or dates for completion of the Implementation Services set out in an Order are estimates only and

the ability to meet them is influenced by a range of factors including, without limitation, response times and level of cooperation of Customer. Any obligations as to time are therefore on a "reasonable efforts" basis only and ZOLL shall not be liable for failure to meet time frames or completion dates unless solely due to ZOLL's negligence.

5. Support Services. ZOLL shall provide the following Support Services for ASP Services without any additional Fees, except that ZOLL will have no obligation to provide such Support Services if any Fees for ASP Services are past due.

5.1. Support.

5.1.1. Emergency Support. ZOLL shall provide telephone support to Customer for 24 hours a day, 7 days a week, to address Errors that prevent Customer from using Supported ASP Services for a purpose for which Customer has an immediate and material need. **"Supported ASP Services"** means the ASP Services for which Customer has paid the then-current Fees. **"Supported Environment"** means a browser and other technical environment that supports the use of the ASP Services in accordance with the Documentation. **"Error"** means a reproducible defect in the Supported ASP Services when operated in accordance with the Documentation in a Supported Environment that causes the Supported ASP Services not to operate substantially in accordance with such Documentation.

5.1.2. Technical Support. ZOLL shall provide telephone support to Customer during 6 a.m. to 6 p.m. Eastern Time, Monday to Friday, excluding ZOLL holidays (**"Business Hours"**) to address all other Errors relating to any Supported ASP Services. Such telephone support will include (i) clarification of functions and features of the Supported ASP Services; (ii) clarification of the Documentation; (iii) guidance in operation of the Supported ASP Services; (iv) assistance in identifying and verifying the causes of suspected Errors in the Supported ASP Services; and (v) advice on bypassing identified Errors in the Supported ASP Services, if reasonably possible. Responses to such reporting shall be provided at a minimum within twenty-four (24) hours during Business Hours.

5.1.3. Resolution. ZOLL shall use commercially reasonable efforts to provide a modification or workaround to Supported ASP Services that resolves an Error in all material respects (**"Resolution"**).

5.1.4. Expenses. Support Services provided hereunder shall be provided from Chelmsford, Massachusetts or Broomfield, Colorado, as determined in ZOLL's sole discretion. Should Customer request that ZOLL send personnel to Customer's location to resolve any Error in the Supported ASP Services, ZOLL may charge Customer a fee of $2,500 for each day ZOLL personnel is at Customer's location.

5.1.5. Exceptions. ZOLL shall have no responsibility under this Agreement to fix any Errors arising out of or related to the following causes: (a) Customer's modification or combination of the Access Software (in whole or in part), (b) use of the Supported ASP Services in an environment other than a Supported Environment; or (c) accident; unusual physical, electrical or electromagnetic stress; neglect; misuse; failure or fluctuation of electric power, air conditioning or humidity control; failure of media not furnished by ZOLL; excessive heating; fire and smoke damage; operation of the Supported ASP Services with other media and hardware, software or telecommunication interfaces; or causes other than ordinary use. Any corrections performed by ZOLL for such Errors shall be made, in ZOLL's reasonable discretion, at ZOLL's then-current time and material charges. ZOLL will provide the Support Services only for the most current release and the one immediately preceding major release of any Access Software. Notwithstanding anything to the contrary in the Agreement, (i) ZOLL may cease providing Support Services for any ASP Services upon at least six (6) months advance notice to Customer of such cessation and (ii) Support Services do not cover Third Party Products or Services (defined below).

5.2. Conditions and Limitations. Customer shall provide ZOLL with access to Customer's personnel and its equipment. This access must include the ability to remotely access the equipment on which the Supported ASP Services are operating and to obtain the same access to the equipment as those of Customer's employees having the highest privilege or clearance level. ZOLL will inform Customer of the specifications of the remote access methods available and associated software needed, and Customer will be responsible for the costs and use of said equipment. Fees for third party software and services are set by the owner of such software.

6. Warranties.

6.1. Implementation Services and Support Services. Subject to Customer's payment of the Fees, ZOLL warrants that any Implementation Services or Support Services provided to Customer will be performed with due care in a professional and workmanlike manner. ZOLL shall, as its sole obligation and Customer's sole and exclusive remedy for any breach of the warranty set forth in this Section 6.1, perform again the Implementation Services or Support Services that gave rise to the breach or, in the case of Implementation Services, at ZOLL's option, refund the Fees for such Implementation Services paid by Customer for the Implementation Services which gave rise to the breach. The availability of any remedy for a breach of the warranty set forth in this Section 6.1 is conditioned upon Customer notifying ZOLL in writing of such breach within thirty (30) days following performance of the defective Implementation Services or Support Services, specifying the breach in reasonable detail.

6.2. ASP Services and Access Software. Subject to Customer's payment of the Fees, ZOLL represents and warrants with respect to any ASP Services that (i) ZOLL has the right to license the Access Software and Documentation and make the ASP Services available to Customer pursuant to this Agreement and (ii) the ASP Services, when used as permitted and in accordance with the Documentation, will materially conform to the Documentation. ZOLL does not warrant that Customer's use of the ASP Services will be error free or uninterrupted. Customer will notify ZOLL in writing of any breach of this warranty with respect to any ASP Services prior to the expiration or termination of the Order for such ASP Services. If ZOLL is unable to provide a correction or work-around pursuant to the terms governing the provision of the ASP Services after using commercially reasonable efforts, ZOLL may terminate such Order upon written notice to Customer. Any such correction or work-around shall not extend the term of such Order. This Section 6.2 sets forth Customer's exclusive remedy, and ZOLL's entire liability, for breach of the warranty for the ASP Services contained herein.

6.3. Warranty Disclaimers. The warranties for the Software and Services are solely and expressly as set forth in Section 6.1 and Section 6.2 and are expressly qualified, in their entirety, by this Section 6.3. EXCEPT AS EXPRESSLY SET FORTH IN SECTION 6.1 AND SECTION 6.2, (A) THE SOFTWARE AND SERVICES ARE PROVIDED STRICTLY **"AS IS"**, WITHOUT ANY WARRANTIES OF ANY KIND, WHETHER EXPRESS, IMPLIED, STATUTORY, WRITTEN OR ORAL; (B) ZOLL DOES NOT PROMISE THAT THE SOFTWARE OR SERVICES WILL BE SECURE, UNINTERRUPTED OR ERROR-FREE OR THAT THEY ARE SUITABLE FOR THE PARTICULAR NEEDS OF CUSTOMER, REGISTERED USERS OR ANY THIRD PARTY; AND (C) ZOLL SPECIFICALLY DISCLAIMS ALL IMPLIED WARRANTIES, INCLUDING, WITHOUT LIMITATION, ALL WARRANTIES OF MERCHANTABILITY, FITNESS FOR A PARTICULAR PURPOSE, TITLE, AND NON INFRINGEMENT, AND ANY WARRANTIES ARISING FROM COURSE OF DEALING OR COURSE OF PERFORMANCE OR USAGE IN TRADE. CUSTOMER ACKNOWLEDGES THAT IT HAS RELIED ON NO WARRANTIES OTHER THAN THE EXPRESS WARRANTIES IN THIS AGREEMENT, AND THAT NO WARRANTIES ARE MADE BY ANY OF ZOLL'S LICENSORS OR SUPPLIERS WITH RESPECT TO THIRD PARTY PRODUCTS OR SERVICES. Customer acknowledges and agrees that, in entering into this Agreement, it has not relied upon the future availability of any new or enhanced feature or functionality, or any new or enhanced product or service, including, without limitation, updates or upgrades to ZOLL's existing products and services. ZOLL's performance obligations hereunder are limited to those expressly enumerated herein, and payment for ZOLL's performance obligations shall be due as described herein.

7. Confidentiality. Neither party will use any trade secrets, information, or other material, tangible or intangible, that relates to the business or technology of the other party and is marked or identified as confidential or is disclosed in circumstances that would lead a reasonable person to believe such information is confidential

("**Confidential Information**") for any purpose not expressly permitted by this Agreement, and will further disclose the Confidential Information of the party disclosing it ("**Disclosing Party**") only to the employees or contractors of the party receiving it ("**Receiving Party**") who have a need to know such Confidential Information for purposes of this Agreement and who are under a duty of confidentiality no less restrictive than the Receiving Party's duty hereunder. The Receiving Party will protect the Disclosing Party's Confidential Information from unauthorized use, access, or disclosure in the same manner as the Receiving Party protects its own confidential or proprietary information of a similar nature and with no less than reasonable care. The ASP Services, Software and Documentation shall be ZOLL's Confidential Information (including without limitation any routines, subroutines, directories, tools, programs, or any other technology included in the Software), notwithstanding any failure to mark or identify it as such. The Receiving Party's obligations under this Section 7 with respect to any Confidential Information of the Disclosing Party will terminate when and to the extent the Receiving Party can document that such information: (a) was already lawfully known to the Receiving Party at the time of disclosure by the Disclosing Party; (b) is disclosed to the Receiving Party by a third party who had the right to make such disclosure without any confidentiality restrictions; (c) is, or through no fault of the Receiving Party has become, generally available to the public; or (d) is independently developed by the Receiving Party without access to, or use of, Confidential Information. In addition, the Receiving Party may disclose Confidential Information of the Disclosing Party to the extent that such disclosure is: (i) necessary for the Receiving Party to enforce its rights under this Agreement in connection with a legal proceeding; or (ii) required by law or by the order of a court or similar judicial or administrative body, provided that the Receiving Party notifies the Disclosing Party of such disclosure in writing prior to making such disclosure and cooperates with the Disclosing Party, at the Disclosing Party's reasonable request and expense, in any lawful action to contest or limit the scope of such disclosure.

8. Indemnification.

8.1. By ZOLL. ZOLL will defend, at its own expense, any action against Customer or its or any of its agents, officers, director, or employees ("**Customer Parties**") brought by a third party alleging that any Software or Services infringe any U.S. patents or any copyrights or misappropriate any trade secrets of a third party, and ZOLL will pay those costs and damages finally awarded against the Customer Parties in any such action that are specifically attributable to such claim or those costs and damages agreed to in a monetary settlement of such action. The foregoing obligations are conditioned on Customer: (a) notifying ZOLL promptly in writing of such claim or action; (b) giving ZOLL sole control of the defense thereof and any related settlement negotiations; and (c) cooperating with ZOLL and, at ZOLL's request and expense, assisting in such defense. If any of the Software or Services become, or in ZOLL's opinion is likely to become, the subject of an infringement claim, ZOLL may, at its sole option and expense, either: (i) procure for Customer the right to continue using such Software or Services; (ii) modify or replace such Software or Services with substantially similar software or services so that such Software or Services becomes non-infringing; or (iii) terminate this Agreement, in whole or in part. Notwithstanding the foregoing, ZOLL will have no obligation under this Section 8.1 or otherwise with respect to any infringement claim based upon: (1) use of any of the Software or Services not in accordance with this Agreement; (2) any use of any Software or Services in combination with products equipment, software, services or data not supplied by ZOLL if such infringement would have been avoided but for the combination with other products, equipment, software, services or data; (3) the failure of Customer to implement any replacements, corrections or modifications made available by ZOLL for any Software or Services including, but not limited to, any use of any release of the Software other than the most current release made commercially available by ZOLL; (4) any Customer Content; or (5) any modification of any Software or Services or use thereof by any person other than ZOLL or its authorized agents or subcontractors. This Section 8 states ZOLL's entire liability and the exclusive remedy for any claims of infringement.

8.2. By Customer. Customer shall indemnify, defend and hold ZOLL and its agents, officers, directors and employees (the "**ZOLL Parties**") harmless from and against any and all liabilities, losses, expenses, damages and claims (collectively, "**Claims**") that arise out of the following except to the extent the Claims are due to the gross negligence, intentional misconduct or breach of this Agreement by the ZOLL Parties: (i) information provided to any of the ZOLL Parties by any of the Customer Parties; (ii) any of the Customer Parties' use or misuse of any of the Software or Services, including without limitation in combination with Customer's software or services or third party software or services; (iii) any modifications made by any of the Customer Parties to any of the Software or Services; (iv) infringement by any of the Customer Parties of any third party intellectual property right; (v) Taxes (other than taxes based on ZOLL's net income) and any related penalties and interest, arising from the payment of the Fees or the delivery of the Software and Services to Customer; and (ix) any violation of laws or regulations, including without limitation applicable export and import control laws and regulations in the use of any of the Software or Services, by any of the Customer Parties.

9. Limitation of Liability. NOTWITHSTANDING ANYTHING HEREIN TO THE CONTRARY, IN NO EVENT WILL ZOLL OR ITS AFFILIATES, SUBCONTRACTORS OR SUPPLIERS, OR ANY OF THEIR OFFICERS OR DIRECTORS, BE LIABLE, EVEN IF ADVISED OF THE POSSIBILITY, FOR: (i) SPECIAL, INCIDENTAL, INDIRECT, PUNITIVE, EXEMPLARY OR CONSEQUENTIAL DAMAGES OF ANY KIND, HOWEVER CAUSED AND ON ANY THEORY OF LIABILITY (INCLUDING, BUT NOT LIMITED TO, NEGLIGENCE), (ii) LOSS OF PROFIT, DATA, BUSINESS OR GOODWILL, COSTS OF PROCUREMENT OF SUBSTITUTE GOODS OR SERVICES OR (iii) ANY LOSSES, COSTS OR DAMAGES ASSOCIATED WITH CUSTOMER'S PRODUCTS OR OTHER ELEMENTS INCORPORATED OR USED THEREWITH WHICH WERE NOT PROVIDED BY ZOLL OR WITH RESPECT TO ANY MODIFICATIONS MADE TO THE SOFTWARE OR SERVICES OR MISUSE OF THE SOFTWARE OR SERVICES. ZOLL'S TOTAL CUMULATIVE LIABILITY IN CONNECTION WITH THIS AGREEMENT, WHETHER IN CONTRACT OR TORT OR OTHERWISE, WILL NOT EXCEED THE AMOUNT PAID TO ZOLL BY CUSTOMER FOR THE SOFTWARE AND SERVICES PROVIDED UNDER THIS AGREEMENT DURING THE 12-MONTH PERIOD PRECEDING THE EVENTS GIVING RISE TO SUCH LIABILITY. Customer acknowledges that these limitations reflect the allocation of risk set forth in this Agreement and that ZOLL would not enter into this Agreement without these limitations on its liability. Customer agrees that these limitations shall apply notwithstanding any failure of essential purpose of any limited remedy. The remedies in this Agreement are Customer's sole and exclusive remedies. In addition, ZOLL disclaims all liability of any kind of ZOLL's licensors and suppliers, for third party products or services, and for the actions or omissions of Customer's representatives.

10. Ownership. All right, title and interest, including but not limited to all existing or future copyrights, trademarks, service marks, trade secrets, patents, patent applications, know how, moral rights, contract rights, and proprietary rights, and all registrations, applications, renewals, extensions, and combinations of the foregoing, in and to the following are the exclusive property of ZOLL (or, as the case may be, its subsidiaries, licensors and suppliers): (i) ASP Services, Software, Documentation, and all proprietary technology used by ZOLL to perform its obligations under this Agreement; (ii) all software, tools, routines, programs, designs, technology, ideas, know-how, processes, techniques and inventions that ZOLL makes, develops, conceives or reduces to practice, whether alone or jointly with others, in the course of performing the Services; (iii) the fully compiled version of any of the foregoing software programs that can be executed by a computer and used without further compilation (the "**Executable Code**"); (iv) the human readable version of any of the foregoing software programs that can be compiled into Executable Code (the "**Source Code**"); and (v) all enhancements, modifications, improvements and derivative works of each and any of the foregoing (the "**ZOLL Property**"). If any derivative work is created by Customer from the Software or Services, ZOLL shall own all right, title and interest in and to such derivative work. Any rights not expressly granted to Customer hereunder are reserved by ZOLL (or its licensors and suppliers, as the case may be).

11. Term and Termination.

11.1. Term. The term of this Agreement (**"Term"**) begins on the effective date of the first Order incorporating this Agreement and continues until it is terminated. The term of each Order begins on the effective date of such Order and continues until it expires or is terminated; *provided, however*, that such term (and any extension thereof) shall automatically renew for an equivalent period at ZOLL's then current list pricing unless either party notifies the other party in writing of an intent to not renew such term at least ninety (90) days prior to the expiration of such term. **"Implementation Date"** for any ASP Services means the earlier of (a) the date upon which the activation of such ASP Services is complete and such ASP Services are able to function as described in the warranty for such ASP Services, regardless of whether Customer uses such ASP Services or (b) one hundred eighty (180) days following the shipment of the monitor/defibrillators in connection with which such ASP Services are to be used, unless a delay in the activation of such ASP Services is caused by ZOLL, in which case the Implementation Date shall be postponed by a number of days equal to the delay that ZOLL has caused; or (c) if Customer does not use Implementation Services to activate such ASP Services, the date of the Order for such ASP Services.

11.2. Termination. Either party may terminate this Agreement or any Order without cause on thirty (30) days' prior written notice to the other party. Either party may terminate this Agreement or any Order if the other party materially defaults in the performance of any of its obligations hereunder and fails to cure such default within twenty (20) days after written notice from the non-defaulting party.

11.3. Effects of Termination. Upon expiration or termination of this Agreement or any Order for any reason: (a) all amounts, if any, owed to ZOLL under this Agreement or the Order that has expired or been terminated (the **"Expired or Terminated Document"**) before such termination or expiration will become immediately due and payable; (b) Customer's right to access the ASP Services, and all licensed rights granted, in the Expired or Terminated Document will immediately terminate and cease to exist; and (c) Customer must (i) promptly discontinue all use of any ASP Services provided under the Expired or Terminated Document (ii) erase all copies of Access Software from Customer's computers and the computers of its customers and return to ZOLL or destroy all copies of such Access Software and related Documentation on tangible media in Customer's possession and (iii) return or destroy all copies of the Documentation in Customer's possession or control; (d) each party shall promptly discontinue all use of the other party's Confidential Information disclosed in connection with the Expired or Terminated Document and return to the other party or, at the other party's option, destroy, all copies of any such Confidential Information in tangible or electronic form. Additionally, if any Order for ASP Services is terminated by ZOLL for a material default or by Customer without cause, then Customer immediately shall pay ZOLL an early termination fee equal to the amount of (x) the Fees for such ASP Services otherwise payable during the initial term of such Order had such Order not been terminated during such term minus (y) the sum of such Fees paid by Customer to ZOLL prior to the date of termination. Upon ZOLL's request, Customer will provide a written certification (in a form acceptable to ZOLL), certifying as to Customer's compliance with its post-termination obligations set forth in this Section 11.3.

12. General Provisions.

12.1. Compliance with Laws. Customer shall comply with all applicable laws and regulations, and obtain required authorizations, concerning its use of the ASP Services, including without limitation if applicable all export and import control laws and regulations. Customer will not use any ASP Services for any purpose in violation of any applicable laws. ZOLL may suspend performance if Customer violated applicable laws or regulations.

12.2. Audits and Inspections. Upon written request from ZOLL, Customer shall furnish ZOLL with a certificate signed by an officer of Customer stating that the ASP Services are being used strictly in accordance with the terms and conditions of this Agreement. During the Term and for a period of six months following the termination or expiration of this Agreement, upon prior written notice, ZOLL will have the right, during normal business hours, to inspect, or have an independent audit firm inspect, Customer's records relating to Customer's use of the ASP Services to ensure it is in compliance with the terms of this Agreement. The costs of the audit will be paid by ZOLL, unless the audit reveals that Customer's underpayment of Fees exceeds five percent. Customer will promptly pay to ZOLL any amounts shown by any such audit to be owing (which shall be calculated at ZOLL's standard, non-discounted rates) plus interest as provided in Section 2 above.

12.3. Assignments. Customer may not assign or transfer, by operation of law or otherwise (including in connection with a sale of substantially all assets or equity, merger or other change in control transaction), any of its rights under this Agreement or any Order to any third party without ZOLL's prior written consent. Any attempted assignment or transfer in violation of the foregoing will be null and void. ZOLL shall have the right to assign this Agreement or any Order to any affiliate, or to any successor to its business or assets to which this Agreement relates, whether by merger, sale of assets, sale of stock, reorganization or otherwise, and to contract with any third party to provide part of any of the Software and Services, and to delegate performance of this Agreement or any Order to any of its subsidiaries.

12.4. U.S. Government End Users. If Customer is a branch or agency of the United States Government, the following provision applies. The Software and Documentation are composed of "commercial computer software" and "commercial computer software documentation" as such terms are used in 48 C.F.R. 12.212 (SEPT 1995) and are (i) for acquisition by or on behalf of civilian agencies, consistent with the policy set forth in 48 C.F.R. 12.212; or (ii) for acquisition by or on behalf of units of the Department of Defense, consistent with the policies set forth in 48 C.F.R. 227.7202 1 (JUN 1995) and 227.7202 3 (JUN 1995).

12.5. Notices. All notices, consents, and approvals under this Agreement must be delivered in writing by electronic mail, courier, electronic facsimile, or certified or registered mail (postage prepaid and return receipt requested) to the other party at the address set forth in the most recent Order (or to such other address or person as from time to time provided by such party in accordance with this Section 12.5), and will be effective upon receipt or three (3) business days after being deposited in the mail as required above, whichever occurs sooner.

12.6. Governing Law and Venue; Waiver of Jury Trial. This Agreement will be governed by and interpreted in accordance with the laws of the State of Colorado without reference to its choice of law rules. The United Nations Convention on Contracts for the International Sale of Goods does not apply to this Agreement. Any action or proceeding arising from or relating to this Agreement shall be brought in a federal or state court in the State of Colorado, and each party irrevocably submits to the jurisdiction and venue of any such court in any such action or proceeding. EACH PARTY HEREBY KNOWINGLY, VOLUNTARILY, AND INTENTIONALLY WAIVES ANY RIGHT IT MAY HAVE TO A TRIAL BY JURY IN RESPECT OF ANY LITIGATION ARISING OUT OF OR IN CONNECTION WITH THIS AGREEMENT.

12.7. Remedies. Except as otherwise expressly provided in this Agreement, the parties' rights and remedies under this Agreement are cumulative. Customer acknowledges that the Software and Services are built on valuable trade secrets and proprietary information of ZOLL, that any actual or threatened breach hereof will constitute immediate, irreparable harm to ZOLL for which monetary damages would be an inadequate remedy, and that ZOLL will be entitled to injunctive relief for such breach or threatened breach. Customer further agrees to waive and hereby waives any requirement for the security or the posting of any bond in connection with such remedies. Such remedies shall not be considered to be the exclusive remedies for any such breach or threatened breach, but shall be in addition to all other remedies available at law or equity to ZOLL.

12.8. Waivers. Any waiver or failure to enforce any provision of this Agreement on one occasion will not be deemed a waiver of any other provision or of such provision on any other occasion.

12.9. Severability. If any provision of this Agreement is held by a court of competent jurisdiction to be unenforceable, such provision will be changed and interpreted to accomplish the objectives of such provision to the greatest extent possible under applicable law and the remaining provisions of this Agreement will continue in full force

and effect. In any event, the unenforceability or invalidity of any provision shall not affect any other provision of this Agreement, and this Agreement shall continue in full force and effect, and be construed and enforced, as if such provision had not been included, or had been modified as above provided, as the case may be.

12.10. Independent Contractors. The parties are entering into, and will perform, this Agreement as independent contractors. Nothing in this Agreement will be construed to make either party the agent of the other for any purpose whatsoever, to authorize either party to enter into any contract or assume any obligation on behalf of the other or to establish a partnership, franchise or joint venture between the parties.

12.11. Third Parties. Customer is solely responsible for, and none of the fees set forth herein shall be deemed to cover, any amounts owed to third parties in connection with the use of the ASP Services. If Customer engages a third-party provider (**"Third Party Provider"**) to deliver products or services, including without limitation software, integrated into or receiving data from or accessing the ASP Services (**"Third Party Products or Services"**), Customer represents, warrants and agrees that: (i) ZOLL shall have no liability, and makes no representation, with respect to such Third Party Products or Services; and (ii) the Third Party Provider shall not be an agent of ZOLL. To the extent the ASP Services or Software contains software owned by a third party for which ZOLL has a license agreement with a third party, the ASP Services and Software and all rights granted hereunder are expressly limited by and subject to any license agreements ZOLL may have for such software.

12.12. Force Majeure. Neither party shall be liable for damages for any delay or failure of performance hereunder (other than payment obligation) arising out of causes beyond such party's reasonable control and without such party's fault or negligence, including, but not limited to, failure of its suppliers to timely deliver acceptable parts or services, any act or omission of Customer that interferes with or impedes ZOLL's performance hereunder, acts of God, acts of civil or military authority, fires, riots, wars, embargoes, Internet disruptions, hacker attacks, or communications failures (a **"Force Majeure Event"**).

12.13. Entire Agreement; Amendment; No Third Party Beneficiaries; Survival. This Agreement, which may be accepted by performance, constitutes the entire agreement between the parties regarding the subject hereof and supersedes all prior or contemporaneous agreements, understandings, and communication, whether written or oral, except agreements at zollonline.com. Any other representation or agreement, whether written or oral, including but not limited to any purchase order issued by Customer, shall be wholly inapplicable to the Software and Services and shall not be binding in any way on ZOLL. This Agreement may not be amended or changed or any provision hereof waived except in writing signed by both parties. Any different or additional terms in any purchase order, confirmation or similar form issued or otherwise provided by Customer but not signed by an authorized representative of ZOLL shall have no force or effect. There are no third party beneficiaries of this Agreement. Those provisions of this Agreement that may be reasonably interpreted as surviving termination of this Agreement or the survival of which is necessary for the interpretation or enforcement of this Agreement shall continue in full force and effect in accordance with their terms notwithstanding the termination hereof including, but not limited to, Section 7 (Confidentiality), Section 8 (Indemnification), Section 9 (Limitation on Liability), Section 10 (Ownership), Section 11.3 (Effects of Termination) and Section 12 (General Provisions). This Agreement may be executed in counterparts, each of which will be considered an original, but all of which together will constitute the same instrument.

13. HIPAA. This Section 13 applies if and to the extent that ZOLL creates, receives, maintains or transmits, directly or indirectly, any protected health information of Customer (**"PHI"**) in the course of providing Software or Services to Customer. Capitalized terms used but not defined in this Section 13 have the meanings assigned to them elsewhere in the Agreement or, if not defined therein, as defined in the Health Insurance Portability and Accountability Act of 1996 (P.L. 104 191), 42 U.S.C. Section 1320d, et seq., and regulations promulgated thereunder, as amended from time to time (such statute and regulations collectively referred to as **"HIPAA"**). **"Covered Entity"** as used herein means Customer. **"Business Associate"** as used herein means ZOLL. The purpose of this Section 13 is to comply with 45 C.F.R. §164.502(e) and §164.504(e), governing PHI and business associates under HIPAA

13.1. Applicability. This Section 13 applies if and to the extent that Business Associate creates, receives, maintains or transmits, directly or indirectly, any PHI in the course of providing Software or Services to Covered Entity.

13.2. Compliance and Agents. Business Associate agrees that, to the extent it has access to PHI, Business Associate will fully comply with the requirements of this Section 13 with respect to such PHI. Business Associate will ensure that every agent, including a subcontractor, of Business Associate to whom it provides PHI received from, or created or received by Business Associate on behalf of, Covered Entity will comply with the same restrictions and conditions as set forth herein.

13.3. Use and Disclosure; Rights. Business Associate agrees that it shall not use or disclose PHI except as permitted under this Agreement, and in compliance with each applicable requirement of 45 CFR Section 164.504(e). Business Associate may use or disclose the PHI received or created by it, (a) to perform its obligations under this Agreement, (b) to perform functions, activities, or services for, or on behalf of, Covered Entity as specified in the Agreement, or (c) to provide data aggregation functions to Covered Entity as permitted by HIPAA. Further, Business Associate may use the PHI received by it in its capacity as Business Associate, if necessary, to properly manage and administer its business or to carry out its legal responsibilities. Business Associate may disclose the PHI received by it in its capacity as Business Associate to properly manage and administer its business or to carry out its legal responsibilities if: (a) the disclosure is required by law, or (b) the Business Associate obtains reasonable assurances from the person to whom the information is disclosed that it will be held confidentially and used or further disclosed only as required by law or for the purpose for which it is disclosed to the person and the person notifies Business Associate of any instances of which it is aware that the confidentiality of the information has been breached. Covered Entity shall not request Business Associate to use or disclose PHI in any manner that would not be permissible under HIPAA if done by Covered Entity.

13.4. Safeguards. Business Associate agrees to develop, document, use, and keep current appropriate procedural, physical, and electronic safeguards, as required in 45 C.F.R. §§164.308 - 164.312, sufficient to prevent any use or disclosure of electronic PHI other than as permitted or required by this Agreement.

13.5. Minimum Necessary. Business Associate will limit any use, disclosure, or request for use or disclosure to the minimum amount necessary to accomplish the intended purpose of the use, disclosure, or request.

13.6. Report of Improper Use or Disclosure. Business Associate shall report to Covered Entity any information of which it becomes aware concerning any use or disclosure of PHI that is not permitted by this Agreement and any security incident of which it becomes aware. Business Associate will, following the discovery of a breach of **"unsecured protected health information,"** as defined in 45 C.F.R. § 164.402, notify Covered Entity of such breach within 15 days. The notice shall include the identification of each individual whose unsecured protected health information has been, or is reasonably believed by Business Associate to have been, accessed, acquired, or disclosed during such breach. Business Associate agrees to mitigate, to the extent practicable, any harmful effect that is known to Business Associate of a use or disclosure of PHI by Business Associate in violation of this Agreement.

13.7. Individual Access. In accordance with an individual's right to access to his or her own PHI in a designated record set under 45 CFR §164.524 and the individual's right to copy or amend such records under 45 CFR §164.524 and §164.526, Business Associate shall make available all PHI in a designated record set to Covered Entity to enable the Covered Entity to provide access to the individual to whom that information pertains or such individual's representative.

13.8. Amendment of and Access to PHI. Business Associate shall make available for amendment PHI in a designated record set and shall incorporate any amendments to PHI in a designated record set in accordance with 45 CFR §164.526 and in accordance with any process mutually agreed to by the parties.

13.9. Accounting. Business Associate agrees to document such disclosures of PHI and information related to such disclosures as would be required for Covered Entity to respond to an individual's request for an accounting of disclosures of their PHI in accordance with 45 CFR §164.528. Business Associate agrees to make available to Covered Entity the information needed to enable Covered Entity to provide the individual with an accounting of disclosures as set forth in 45 CFR §164.528.

13.10. DHHS Access to Books, Records, and Other Information. Business Associate shall make available to the U.S. Department of Health and Human Services ("**DHHS**"), its internal practices, books, and records relating to the use and disclosure of PHI received from, or created or received by Business Associate on behalf of, Covered Entity for purposes of determining the Covered Entity's compliance with HIPAA.

13.11. Individual Authorizations; Restrictions. Covered Entity will notify Business Associate of any limitation in its notice of privacy practices, any restriction to the use or disclosure of PHI that Covered Entity has agreed to with an individual and of any changes in or revocation of an authorization or other permission by an individual, to the extent that such limitation, restriction, change, or revocation may affect Business Associate's use or disclosure of PHI.

13.12. HITECH Act Compliance. Covered Entity and Business Associate agree to comply with the amendments to HIPAA included in the Health Information Technology for Economic and Clinical Health Act (the "**HITECH Act**"), including all privacy and security regulations issued under the HITECH Act that apply to Business Associate.

13.13. Breach; Termination; Mitigation. If Covered Entity knows of a pattern of activity or practice of Business Associate that constitutes a material breach or violation of Business Associate's obligations under this Section 13, Covered Entity and Business Associate shall take any steps reasonably necessary to cure such breach and make Business Associate comply, and, if such steps are unsuccessful, Covered Entity may terminate this Agreement. Business Associate shall take reasonable actions available to it to mitigate any detrimental effects of such violation or failure to comply.

13.14. Return of PHI. Business Associate agrees that upon termination of this Agreement, and if feasible, Business Associate shall (a) return or destroy all PHI received from Covered Entity, or created or received by Business Associate on behalf of Covered Entity, that Business Associate has continued to maintain in any form or manner and retain no copies of such information or, (b) if such return or destruction is not feasible, immediately notify Covered Entity of the reasons return or destruction are not feasible, and extend indefinitely the protection of this Section 13 to such PHI and limit further uses and disclosures to those purposes that make the return or destruction of the PHI not feasible.

13.15. De-identified Health Information. Business Associate may de-identify any and all PHI and may create a "**Limited Data Set**" in accordance with 45 C.F.R. § 164.514(b) & (e). Covered Entity acknowledges and agrees that de-identified information is not PHI and that Business Associate may use such de-identified information for any lawful purpose. Use or disclosure of a Limited Data Set must comply with 45 CFR 164.514(e).

13.16. Survival. All representations, covenants, and agreements in or under this Section 13 shall survive the execution, delivery, and performance of this Agreement.

13.17. Further Assurances; Conflicts. Each party shall in good faith execute, acknowledge or verify, and deliver any and all documents which may from time to time be reasonably requested by the other party to carry out the purpose and intent of this Section 13. The terms and conditions of this Section 13 will override and control any expressly conflicting term or condition of the Agreement. All non-conflicting terms and conditions of the Agreement shall remain in full force and effect. Any ambiguity shall be resolved in a manner that will permit Covered Entity to comply with HIPAA. For the avoidance of doubt, a limitation on liability in the Agreement does not conflict with this Section 13.

13.18. Applicable Law. The parties acknowledge and agree that HIPAA may be amended and additional guidance or regulations implementing HIPAA may be issued after the date of the execution of this Agreement and may affect the parties' obligations hereunder. The parties agree to take such action as is necessary to amend this Agreement from time in order as is necessary for Covered Entity to comply with HIPAA.

By signing below, the Customer acknowledges and agrees to those terms and conditions. The person signing below represents and warrants that she or he has the authority to bind the Customer to those terms and conditions.

Customer

Signature:

_____

Name: _____

Title: _____

Company: _____

Company Address: _____

Date: _____

ZOLL Medical Corporation
269 Mill Road
Chelmsford, MA 01824-4105
Federal ID# 04-2711626

Phone: (800) 348-9011
Fax: (978) 421-0015
Email: esales@zoll.com

Professional Ambulance Sales & SERV LLC
Quote No: Q-41077 Version: 1

CONCEPTIONAL DRAWINGS ONLY: DRAWINGS ARE NOT TO SCALE, ALL MEASURES ARE APPROXIMATE & SUBJECT TO ENGINEERING CHANGE

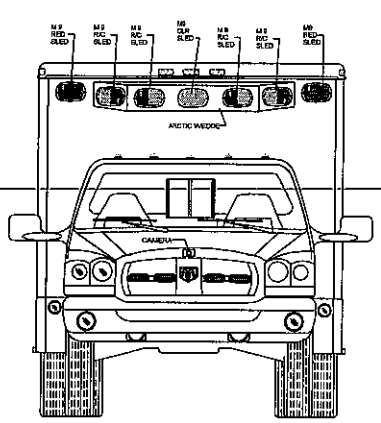

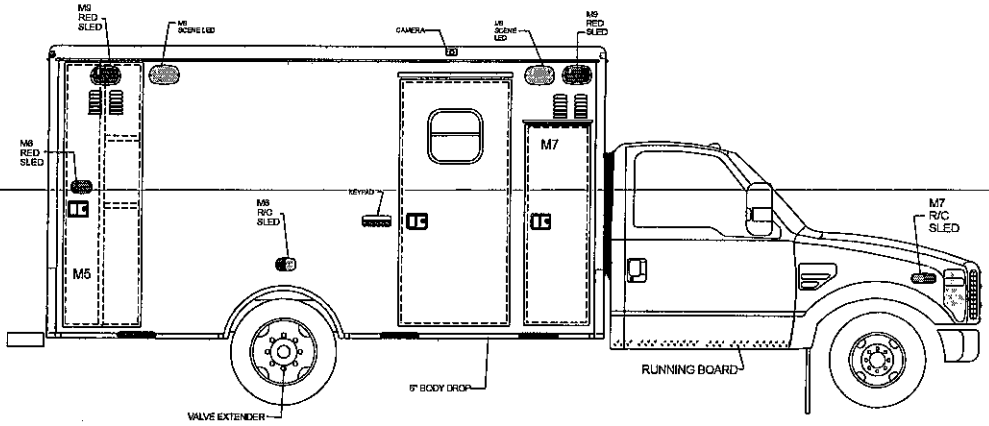

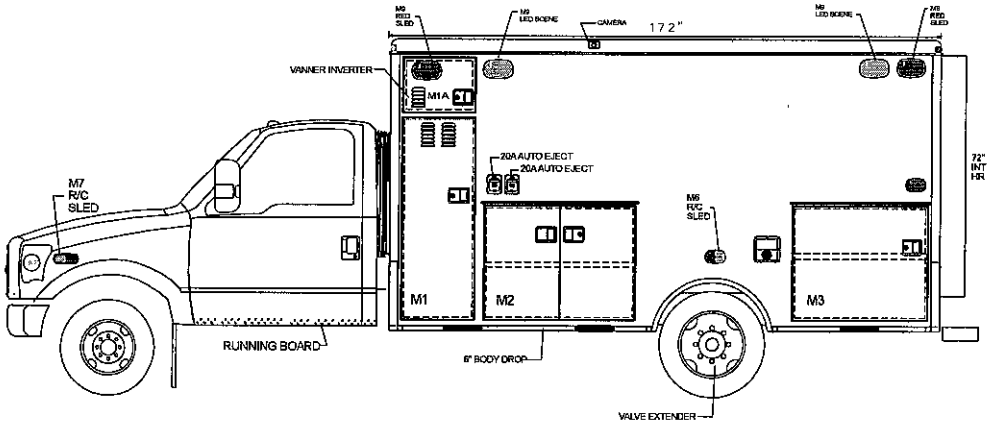

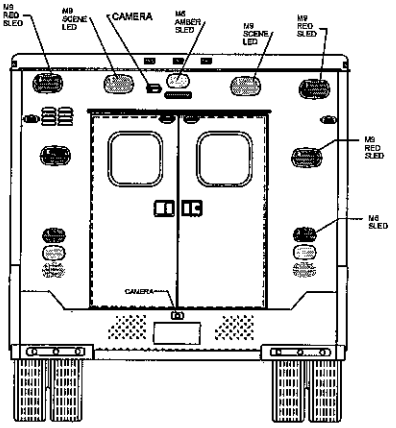

Compartment Dimensions			
Cmpt	Height	Width	Depth
M1	67.5"	22.125"	20"
M1A	17.56"	22.125"	20"
M2	40.5"	49.8"	20"
M3	34.5"	36"	20"
M5	62.8"	25.6"	21"
M6	N/A	N/A	N/A
M7	67.5"	25.25"	21"
C/S Access	84.8"	31"	N/A
Rear Access	60-5/8"	48-3/4"	N/A

*** X SERIES ***

*CONCEPTIONAL DRAWINGS
* Some shown are optional
* Due to AEV's ongoing improvements, drawings can change.

AEV

AMERICAN EMERGENCY VEHICLES	
TITLE: Type I, 172, Exterior	BIG SPRINGS
DWG.# REV#0	
TRUCK#	
BY: JLR DATE: 4-14-21	
BODY #:	

CONCEPTIONAL DRAWINGS ONLY: DRAWINGS ARE NOT TO SCALE, ALL MEASURES ARE APPROXIMATE & SUBJECT TO ENGINEERING CHANGE

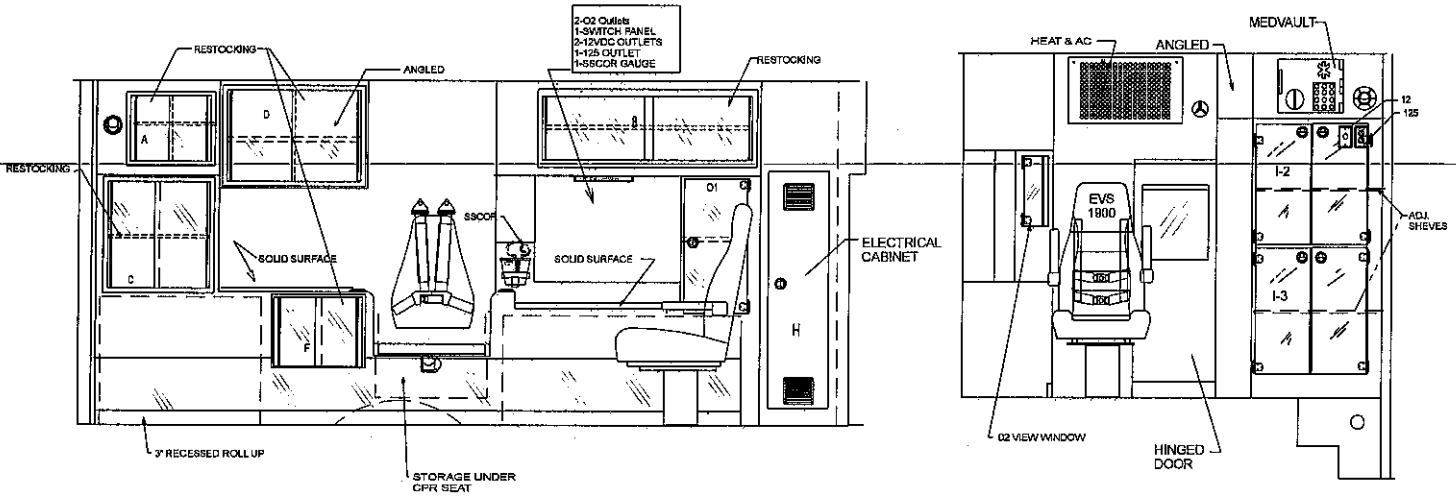

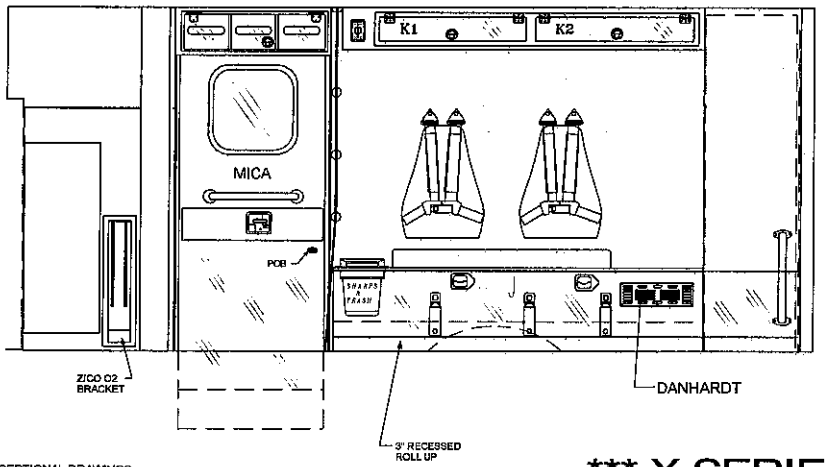

CABINET LIGHTS:
A,D,B,C,F,O1,I1,I2,I3,K1 & K2

*CONCEPTIONAL DRAWINGS
* Some shown are optional
* Due to AEV's ongoing improvements, drawings can change.

*** X SERIES ***

AMERICAN EMERGENCY VEHICLES	
TITLE: Type 1 172" Interior	BIG SPRINGS
DWG.#: REV.#0	
TRUCK#:	
BY:JLR DATE:4-14-21	

QUOTATION

SERVS

BIG SPRING FD

Dealer: Prof TX

Quote No: 10037-0013
Job/Order No: 20OD26284XA
GENERAL: GEN_INFO X **********BID STANDARDS**********
CHASSIS: DOD45/55LW *******DODGE 192 WB CHASSIS**********
CONVERSION: 172T1LWDX 172 x 96 T-1 LWB Dodge X-Series, Conversion
BASE: 172T1LWBDX 172 x 96 T-1 LWB Dodge X Base Price

09/19/2022

PART NO	DESCRIPTION	QTY
00-00-0107	|-- Order Date: Post August 1st, 2022	1
00-00-0113	***|-- Ambulance Built to Star Of Life KKK-A-1882-F Certification, Latest Revision***	***1***
	Exceptions to be noted on final sticker.	
00-10-0015	Vehicle Quantity (Vehicles)	1
00-10-0017	***Ford QVM, Qualified Vehicle Modifiers Program Member***	***1***
00-10-0018	***Product Liability Insurance***	***1***
00-10-0019	***Non-Discrimination and Equal Opportunity***	***1***
00-10-0020	***Drug Free Workplace***	***1***
00-10-0023	***Quality Management System ISO 9001(TM):2015 Registered***	***1***
00-99-9000	Revision Level: 0 - Zero - ORIGINAL VERSION	1
	Aluminum Composite Cabinet Configuration	1
01-1F-0000	Type I AEV Traumahawk Modular Ambulance	1
01-AP-1D73	***2023 Dodge, 5500 4 x 4 DRW Reg Cab, 192" WB, SLT, 6.7L Diesel All assigned***	***1***
	CHASSIS PRICE IS AN ESTIMATE ONLY	
	no discounts are included in this pricing.	
01-3D-C66D	***|-- Engine: 6.7L Cummins I-6 Turbo Diesel***	***1***
01-3D-C700	***|-- RAM AH6 Emergency/ Fire/Rescue Special Emissions Package***	***1***
	Special Emissions-Emergency Vehicle option controls	

PART NO	DESCRIPTION	QTY
01-3D-D010	*|-- RAM up-fitter interface module*	*1*
01-3D-D1HL	*|-- High Idle (Throttle): OEM Voltage Monitoring Auto Idle-Up System*	*1*
01-3D-K65B	*|-- Alternator: Dual 220amp Each*	*1*
01-3D-C74C	*|-- Transmission: Automatic Dodge DG3 w/Overdrive*	*1*
01-3D-C74T	*|-- Transfer Case: NV273 2-Speed*	*1*
01-3D-D3AC	*|-- Air Conditioning Connector Package: N/A*	*1*
01-3D-EC1B	*|-- Wheelbase: The wheelbase is 192" & 108" Cab to Axle*	*1*
01-3D-GVW	*|-- GVWR (4x4): GVWR 18,000 pounds, FAWR = 7,000 , RAWR = 13,500*	*1*
01-3D-K661	*|-- Batteries: (2) 730CCA Batteries under the chassis hood*	*1*
01-3D-KA4A	*|-- Engine Block Heater: Included on Chassis Not connected to shoreline.*	*1*
01-3D-M001	*|-- Rear Suspension: D-45/5500, Liquid Spring, 2022+* SUSP-D135RS3A rev level as of 05/17/2019 *NOTE: If Oxygen Lift is installed, then if the O2 Cmpt Door is open, the kneeling suspension will not dump until door is closed*	*1*
01-TT-0100	*|-- Rear Suspension 1,000 mile re-torque requirement* Rear Suspension manufacturer requires inspect & re-torque at 1,000 Miles	*1*
01-TT-0208	*|-- ""DETAIL"" Liquid Rear Suspension Decal Install* Prior to delivery, detail department is to install a Black Decal on the dash:	*1*
04-SU-0601	*|-- Kneeling Feature: Enable Switch Located in CAB console*	*1*
04-SU-0610	*|-- Kneeling Feature: Activated by TRAILING rear access door*	*1*
04-SU-0651	*|-- Exhaust system termination point: OEM Location, Rt Rear*	*1*
04-SU-14LV	*|-- Leveling Valves: Dual, (1) Left, (1) Right*	*1*
04-SU-2022	*|-- Liquid spring controller shipped loose with completed unit* Dealer to install with customer on arrival	*1*
01-3D-N1BA	*|-- Exhaust System: with side exit*	*1*
01-3D-NH4A	*|-- Fuel Tank: 52 Gallon, Single*	*1*
01-3D-R3CC	*|-- Front Tire Tread: All Traction*	*1*
01-3D-R4LA	*|-- Front Tires: Pair of 225/70R19.5F*	*1*
01-3D-RPM	*|-- Front Wheels: 19.5" x 6.75 Steel*	*1*
01-3D-RPW	*|-- Rear Wheels: 19.5" x 6.75 Steel*	*1*
01-3D-S4LA	*|-- Rear Tires: Two pair of 225/70R19.5F*	*1*
01-3D-ST04	*|-- Tire SPARE: Matching Random Make D45/5500 OEM supplied*	*1*
01-FM-TI01	*|-- Location: Shipped Loose*	*1*

PART NO	DESCRIPTION	QTY
01-3D-ST10	***|-- Wheel Finish: Polished SS Wheel Simulators (D4500)***	***1***
01-3D-AU0A	***|-- Cab Equipment: Keyless Remote Option***	***1***
01-3D-DB6A	***|-- Mirror: Exterior, Electric and Heated***	***1***
01-3D-V46A	***|-- Front Bumper: Chrome Steel***	***1***
01-3D-69IA	***|-- Interior Trim, Medium Gray***	***1***
01-3D-AQTC	***|-- Cab Seats: Driver and Passenger, Captain's Chairs***	***1***
01-3D-AQU	***|-- Cab Seat Belts; Black***	***1***
01-3D-URSD	***|-- Radio: Cab AM/FM, voice activated, blue tooth Uconnect***	***1***
01-TP-0010	***|-- Tire Pressure Monitoring System: None***	***1***
01-FU-0135	Fuel Surcharge, Dodge 3500/4500/5500, all Chassis This is a fuel surcharge applied to all Dodge 4500/5500 Style Chassis.	1
06-EA-01FD	***Tire Valve Extensions, S/S Braided, PR, Dual Rear Wheel***	***1***
	BODY Generation 9 -Running change to Gen 9 starting Jan 3, 2022 most mods	***1***
02-00-0002	***|-- Body Build Information*** **Body Number; 12774, 12787** **Account Manager; Jody Richardson** **Chassis Type : 2020 Dodge, 5500 4 x 4 DRW Reg Cab, 192" WB, SLT, 6.7L Diesel** **Mickey Body Due Date;** **12774 = 5-19-20** **12787 = 5-27-20**	***1***
02-00-0003	|-- ALL DIMENSIONS ON ORDER WILL HAVE A VARIABLE OF + OR - 1/4" Unless specified as a minimum dimension.	1
02-B2-XO95	Body, Mod: Dodge X Type 1 LWB, 172" x 96" x 72" Interior HR - 6" Body Drop	1
02-00-0006	|-- Headroom: 74/72" Finished Interior - Ducted A/C	1
02-00-0060	|-- Compartment and Entry door Full length Stainless Steel Hinges std	1
02-B0-CC01	|-- Compartment Construction: STANDARD, Unless Specified Otherwise Sides and Back: .100 Polished Aluminum Diamond Plate Compartment Ceiling: .090 Aluminum Sheet	1
02-B0-SFL0	|-- Compt Floors: Sweep-out, even with bottom door jamb Unless Specified Otherwise.	1
02-B0-CC41	|-- Compartment floor thickness .125" standard	1
02-B0-CC18	|-- Compartment Ventilation - Flap style #VT-2495-A01, STD	1

PART NO	DESCRIPTION	QTY
02-B0-CEX2	|-- Curbside Entry Door (CSE): 84.813"H x 31.0"W X w/6" drop T1 T9	1
02-B0-09B2	|-- C/S Door Check : Double Action Gas Shock	1
04-EA-09B1	|-- Door Swing Angle: Set to 90-100 degrees	1
02-B0-CESL	|-- Curbside Entry Door (CSE) Location: Standard, Rearward of M-7 Compt if Optioned	1
02-B1-SWX2	|-- Step Well, CURBSIDE Entry Door, 2-Step Embossed Diamond Plate X series (2) Steps : 9" Risers x 10" Tread	1
05-IL-09X1	***|-- Light, Step Well: 3" Kinequip #4302S, Chrome, LED, STD*** Light shall come on with CS door only.	***1***
05-IL-09XN	|-- Light, Step Well #2 : NONE	1
02-BC-0504	***|-- Walk through, Cab Height, T1 Light Truck Dodge***	***1***
02-BC-0700	***|-- Cab Roof Support : 3/16" x 3" Steel Plate, Per Engineering Drawing*** Between cab headliner and bottom side of cab roof to prevent oil canning.	***1***
04-00-0900	***|-- Threshold Transition Plate - Type I*** Install a transition plate at module interior, to protect bellows connection from module to cab. Material to be Aluminum.	***1***
02-BD-0120	***|-- Body Drop: 6" Both Sides, Ahead of Rear Wheels***	***1***
02-BD-0120	***|--***	***1***
02-X1-M149	***|-- M-1 Compt (LF): 67.5" H x 22.125" W x 20.0" D***	***1***
02-B0-CC02	|-- Compartment Construction: STANDARD Diamond Plate Sides and Back: .100 Polished Aluminum Diamond Plate Compartment Ceiling: .090 Aluminum Sheet	1
02-B0-CC08	|-- Compartment Door Panel: Diamond Plate	1
12-DC-GA10	|-- Compartment Finish: Diamond Plate Standard	1
02-B0-CC16	|-- Compartment Door Ventilation - small punched half-moon Louvered Door	1
02-B0-SWFL	|-- Compt Floor: Sweep-out, even with bottom door jamb.	1
02-B0-CC41	|-- Compartment floor thickness .125" standard	1
02-BC-10A5	|-- Compartment Door: SINGLE DOOR, Forward hinged 2-point Latch	1
02-B0-09B0	|-- Compt Door Check: Double Action Gas Shock	1
04-EA-09B1	|-- Door Swing Angle: Set to 90-100 degrees	1
05-EL-40X1	|-- Light, Compt, LED, M-1 (LF): Intertek Model No ZY-156-LEDC, STD MTB Note: 1" Hole, Centered in Compartment ceiling	1
08-B1-02LI	|-- Prep for 02 Lift: NONE	1
02-X1-M1AD	|-- M-1A Comp (LF Upper):72 HR, 17.56" H x 22.125" W x 20.0" D	1
02-B0-CC02	|-- Compartment Construction: STANDARD Diamond Plate Sides and Back: .100 Polished Aluminum Diamond Plate Compartment Ceiling: .090 Aluminum Sheet	1

PART NO	DESCRIPTION	QTY
02-B0-CC08	|-- Compartment Door Panel: Diamond Plate	1
12-DC-GA10	|-- Compartment Finish: Diamond Plate Standard	1
02-B0-CC16	|-- Compartment Door Ventilation - small punched half-moon Louvered Door	1
02-B0-CC1B	***|-- Compartment Ventilation - M-1A Pancake Fan & 1-Column of Louvers***	***1***
02-B0-SWFL	|-- Compt Floor: Sweep-out, even with bottom door jamb.	1
02-B0-CC41	|-- Compartment floor thickness .125" standard	1
02-BC-10A0	|-- Compartment Door: SINGLE DOOR, 1-point Latch	1
02-B0-09B0	|-- Compt Door Check: Double Action Gas Shock	1
04-EA-09B1	|-- Door Swing Angle: Set to 90-100 degrees	1
05-EL-40XB	|-- Light, Compt, LED, M-1A (LF Upper): Intertek Model No ZY-156-LEDC, STD MTB Note: 1" Hole, Centered in Compartment ceiling	1
02-X1-M277	***|-- M-2 Compt (LFM): 40.5" H x 49.875" W x 20.0" D Dodge chassis***	***1***
02-B0-CC02	|-- Compartment Construction: STANDARD Diamond Plate Sides and Back: .100 Polished Aluminum Diamond Plate Compartment Ceiling: .090 Aluminum Sheet	1
02-B0-CC08	|-- Compartment Door Panel: Diamond Plate	1
12-DC-GA10	|-- Compartment Finish: Diamond Plate Standard	1
02-B0-SWFL	|-- Compt Floor: Sweep-out, even with bottom door jamb.	1
02-B0-CC41	|-- Compartment floor thickness .125" standard	1
02-B1-BION	***|-- Bio-Waste None;***	***1***
02-B1-ELEH	***|-- Electrical Compartment : Circuit Board Storage relocated to cabinet H***	***1***
02-BC-10D0	|-- Doors, Compartment, DOUBLE DOORS (std)	1
02-B0-09B0	|-- Compt Door Check: Double Action Gas Shock	1
04-EA-09B1	|-- Door Swing Angle: Set to 90-100 degrees	1
04-TS-11D3	|-- M-2 Shelf, Adjustable, Ext: .125 Smooth Alum, 2" Upward lip	1
04-TS-4010	|-- Shelf Bracket: 90 Deg with Slotted Holes	1
05-EL-40X2	***|-- Lights, (2) Compartment: Kinequip #KSLC8 8", Strip Light, M-2, STD*** MTB Note: No light hole required (1) on ceiling, centered near door jamb, on angled bracket and (1) on Wall #3, near door jamb, on angled bracket, to illuminated under shelf.	***1***
05-HA-13I6	***|-- Condenser, 12V: ACC #25062, Dual Fan, Front of Module*** as part of HWP purchased for the medium duty units.	***1***

PART NO	DESCRIPTION	QTY
04-HA-1310	***|-- ARCTIC WEDGE Front of Body***	***1***
	part #WEDGE-HVAC	
	Use of the wedge is subject to engineering review and approval for Light duty Type III models. A reduction in light sizing above the wedge may be required.	
12-B0-0002	***|-- Painted Part- Painted White YZ Std***	***1***
12-B0-0002	***|--***	***1***
06-RR-13Z0	|-- Standard Conduit: 1-1/2"", with pull wire	1
06-RR-13O4	***|-- CONDUIT ORIGINATION POINT: M-1A compartment***	***1***
06-RR-13T3	|-- CONDUIT TERMINATION POINT: Behind A/A Board (Panel)	1
06-RR-13Z1	|-- Conduit #2 1-1/2"" diameter, with pull wire, Type 1 units Std	1
06-RR-13O1	|-- CONDUIT ORIGINATION POINT: Electrical Circuit board cabinet	1
06-RR-13T2	|-- CONDUIT TERMINATION POINT: Behind Driver's seat	1
02-X1-M377	***|-- M-3 Compt (LR): 34.5" H x 36" W x 20.0" D***	***1***
02-B0-CC02	***|-- Compartment Construction: STANDARD Diamond Plate***	***1***
	Sides and Back: .100 Polished Aluminum Diamond Plate	
	Compartment Ceiling: .090 Aluminum Sheet	
02-B0-CC08	***|-- Compartment Door Panel: Diamond Plate***	***1***
12-DC-GA10	***|-- Compartment Finish: Diamond Plate Standard***	***1***
02-B0-SWFL	***|-- Compt Floor: Sweep-out, even with bottom door jamb.***	***1***
02-B0-CC41	***|-- Compartment floor thickness .125" standard***	***1***
02-BC-10A5	***|-- Compartment Door: SINGLE DOOR, Forward hinged 2-point Latch***	***1***
02-B0-09B0	***|-- Compt Door Check: Double Action Gas Shock***	***1***
04-EA-09B1	***|-- Door Swing Angle: Set to 90-100 degrees***	***1***
04-TS-11B0	***|-- Shelf, Adjustable, Ext: .125 smooth Aluminum, 2" Upward Lips***	***1***
04-TS-4010	***|-- Shelf Bracket: 90 Deg with Slotted Holes***	***1***
05-EL-40X3	***|-- Light, Compt, LED, M-3 (LR): Intertek Model No ZY-156-LEDC, STD***	***1***
	MTB Note: 1" Hole, Centered in Compartment ceiling	
02-X1-M574	|-- M-5 Compt (RR): 72 HR, 82.812" H x 25.625" W x 21." D	1
02-B0-CC02	|-- Compartment Construction: STANDARD Diamond Plate	1
	Sides and Back: .100 Polished Aluminum Diamond Plate	
	Compartment Ceiling: .090 Aluminum Sheet	
02-B0-CC08	|-- Compartment Door Panel: Diamond Plate	1
12-DC-GA10	|-- Compartment Finish: Diamond Plate Standard	1
02-B0-CC12	|-- Compartment Ventilation - Compartment Ceiling O O O O	1
	MTB NOTE: hat channel with three (4") holes above the hat at the ceiling level.	
02-B0-CC16	|-- Compartment Door Ventilation - small punched half-moon Louvered Door	1
02-B0-SWFL	|-- Compt Floor: Sweep-out, even with bottom door jamb.	1
02-B0-CC41	|-- Compartment floor thickness .125" standard	1

PART NO	DESCRIPTION	QTY
02-BC-10A5	|-- Compartment Door: SINGLE DOOR, Forward hinged 2-point Latch	1
02-B0-09B0	|-- Compt Door Check: Double Action Gas Shock	1
04-EA-09B1	|-- Door Swing Angle: Set to 90-100 degrees	1
04-TS-14M3	***|-- M-5 Divider, Vertical, Full compartment height, smooth alum, Fixed***	***1***
	Divider to be Centered in Compt	
04-TS-1200	***|-- M-5 Shelves, Adjustable, Ext: (2) .125 Aluminum, Partial Width 2" lips upward***	***2***
04-TS-4010	***|-- Shelf Bracket: 90 Deg with Slotted Holes***	***2***
04-TS-STR1	***|-- Strap: 2" Webb Seatbelt buckle chrome footman loops -Custom Length ILOS***	***1***
	This strap is to secure things from moving while the vehicle is in motion.	
04-TS-STR2	|-- 2" Footman Loops: Locate back from jamb	1
05-EL-40X5	|-- Light, Compt, LED, M-5 (RR): Intertek Model No ZY-156-LEDC, STD	1
	MTB Note: 1" Hole, Centered in Compartment ceiling	
02-M1-X600	***|-- M-6 Compt (RRFwd): Delete***	***1***
02-X1-M775	***|-- M-7 Compt (RF): 72 HR, 67.5" H x 25.25" W, I/O to ALS 21" D Below Floor***	***1***
02-BC-10A5	|-- Compartment Door: SINGLE DOOR, Forward hinged 2-point Latch	1
02-B0-09B0	|-- Compt Door Check: Double Action Gas Shock	1
04-EA-09B1	|-- Door Swing Angle: Set to 90-100 degrees	1
05-EL-40M7	|-- Light, Compt, M-7 (RF): NONE	1
02-X1-M888	|-- M-8 Drawer (RF): NONE. Batteries Under Hood	1
05-ZZ-ZZZZ	|--	1
02-X1-RA02	|-- Rear Access Doors: 46.75" Wide x 60.625" High	1
09-IN-3STX	|-- Insulation: All Module Doors, 2" Black Foam, X-Series units	1
	#INSU-ARM2	
09-IN-3STY	|-- Insulation: All Module Doors, Black Sound Proofing, X-Series units	1
	#INSU-KSU	
02-ZZ-ZZZZ		1
	WELDING - CELL 1	**1**
04-00-0001		1
04-BP-X144	BODY PROTECTION AND TRIM PACKAGE: Dodge X-Series Units	1
04-AS-0370	|-- Wire/Hose Cover : Diamond Plate, Between Cab & Module	1
04-AS-06A0	***|-- Fuel Fill: CPI FG5301-1-238-U Open Housing, Polished Bezel - 53 degree (Std)***	***1***
04-BW-ABY	***|-- Bumper, Rear: X-Series 1/9 96" Wide w/ Embossed D/P Pontoon Covers***	***1***
	X-Series Design.	
	Purchasing NOTE : Special Order Delete standard rear bumper assembly	from

PART NO	DESCRIPTION	QTY
	Mickey Body	
04-BW-FLIW	|-- Step, Center:2" x 9" Bar Grate, flip-up, recessed	1
	Standard with X series,> AEV builds	
	MTB delete flip up step.	
04-EA-1306	|-- Dock Bumpers: Rubber D-Shape, 4" H x 18" W x 4" Thick X -series	1
04-BW-AF19	|-- Fenders, Rear: Polished Aluminum	1
04-BW-DN0	|-- Corner Caps "X Series:	1
04-BW-DN2	|-- Front Corner Caps: 24.0" High, Alum Diamond Plate	1
	NOTE: Standard Front Corner Caps from Mickey Body	
04-BW-DN3	***|-- Rear Corner Caps: 24" High, Polished Diamond Plate, X-Series***	***1***
	Purchasing NOTE: Special Order from vendor. Delete standard rear corner caps from MTB	
04-BW-DP2	***|-- Rear Kick Plate: Aluminum D/P, Recessed, X-Series 96" wide STD Type 1***	***1***
	Delete standard rear kick-plate from Mickey Body	
	PLAT-XT1LDUTYA part issued. No adjustments to design in this part.	
04-BW-TA03	|-- Recessed Tag Area: Polished Aluminum Diamond Plate	1
04-BW-TA04	|-- Location: Centered in the kick plate	1
05-EL-44TN	|-- Tag Light: Kinequip LED #132703C	1
05-EL-44XL	|-- Rear Flip up Step Lights, (2), Kinequip LED Strip light #KFL-SLC8	1
	Mounted above rear bumper flip up step, in kick-plate recess	
04-BW-DP93	|-- Front Stone Guards: 24.0" High, Alum Diamond Plate	1
	If there is a body drop, add the appropriate height to Stone Guards.	
04-BW-DPY	|-- Skirt Rails: Polished D/P, w/ 12-inch LED Lights, X-series >>	1
	MTB, >Built by AEV	
05-EL-SKXB	|-- Skirt rail Lights, Front Pair 12" LED	1
	(1) Each side, forward position, in front skirt rail	
05-EL-SKV0	***|-- (2) Skirt rail LED Strip Lights, Red/White 12" X-series***	***1***
	NOTE: Mount Red On TOP and Clear on Bottom	

PART NO	DESCRIPTION	QTY
05-EL-SKXC	|-- Skirt rail Lights, Middle Pair 12" LED (1) Each side, rear position, in front skirt rail	1
05-EL-SKV0	***|-- (2) Skirt rail LED Strip Lights, Red/White 12" X-series*** NOTE: Mount Red On TOP and Clear on Bottom	***1***
05-EL-SKXD	|-- Skirt rail Lights, Rear Pair 12"-LED (1) Each side, in rear skirt rail	1
05-EL-SKV0	***|-- (2) Skirt rail LED Strip Lights, Red/White 12" X-series*** NOTE: Mount Red On TOP and Clear on Bottom	***1***
05-EL-SKZ1	|-- Skirt rail Lights Switched: Separate Switch in the Cab console	1
05-EL-SLHX	***|-- LED Ground Lights: (6) Kinequip White 12" -LED lights, In Skirt rails x*** Lights to stay on 30 seconds after all doors are closed.	***1***
05-EL-SLGY	***|-- LED Ground Lights Switched:*** The underbody lights work off a switch in the console or with any entry or compartment door. Lights stay on for 30 seconds after all doors are closed.	***1***
04-DE-0010	|-- Rear Deflector: NONE	1
04-EA-09A0	|-- (2) Rear Door Hold Opens: Grabber Style, 1 on each door	1
04-ZZ-ZZZZ	|--	1
04-EA-14XE	|-- Running Boards: Embossed D/P, w/Bar Grate Insert, Dodge, X-Series Design std	1
04-EA-1123	|-- Mud Flaps Front: Modular, Rubber, Dodge Type 1	1
04-EA-1132	|-- Mud Flaps Rear: Modular, Rubber AEV LOGO	1
05-EL-39X4	***|-- Lights, Cab Step: 2" White LED , surface mount on box front, (#TOCACCCR) - x ser*** Chrome Flange Activate by Cab Doors. Constant Hot. (2) LITE-TOC (2) Lite-TFLANGEC	***1***
04-EA-09A0	(2) Rear Door Hold Opens: Grabber Style, 1 on each door	1
04-ZZ-ZZZZ	|--	1
	EXTERIOR LIGHTING / HEAT/AC / INSULATION - CELL 2	1
05-00-0001		1
05-EL-1800	CORNER CAP LED ICC/WARNING LIGHTS	1
05-EL-18F0	|-- Front Corner Cap LED ICC/Warning Lights: Warnings RED/WHITE	1
05-EL-18F1	|-- Front Center ICC Lts: (3) AMBER Kinequip LED No 112401A, Switch w/ Headlights.	1

PART NO	DESCRIPTION	QTY
05-EL-18FH	|-- Front ICC Lt Guards: NONE	1
05-EL-18R5	|-- Rear Corner Cap LED ICC/Warning Lights: Warnings RED/AMBER	1
05-EL-18R1	|-- Rear Center ICC Lts: (3) RED Kinequip LED No 112401R	1
	Switch w/ Headlights	
05-EL-18RH	|-- Rear ICC Lt Guards: NONE	1
06-SW-CC0	|-- ICC Warning Lights Switched: Primary Only	1
05-EL-2503	***LED Lights, Patient on Board, X-Series Units***	***1***
	Install lights in the following locations :	
	M-1A Compartment - On Door panel, Outer lower corner	
	M-1 Compartment - On Door panel, Outer Edge, Centered Top to Bottom	
	M-2 Compartment - On Forward Door panel, Upper outer corner	
	M-2 Compartment - On Trailing Door exterior, Upper outer corner	
	M-3 Compartment - On Door panel, Outer Edge, Centered Top to Bottom	
	M-5 Compartment - On Door panel, Outer Edge, Centered Top to Bottom	
	M-7 Compartment - On Door panel, Outer Edge, Centered Top to Bottom	
	C/S Entry Door - Below Center panel, Outer Edge	
	Rear Entry Doors - (1) each door, Below Center panel, Outer Edge	
	A Total of (10) Lights	
05-EL-252C	|-- Red/White LED POB Light, Kinequip Each, X-Series Units	11
05-EL-256X	|-- Lights Switched with Entry Door Switch	1
05-EL-258X	Underbody Ground Lights : NONE	1
05-EL-42XX	TAIL LIGHTS	1
05-EL-23X2	|-- Tail Lights, Whelen LED Combinations , STD, X-Series	1
05-EL-35A6	***|-- Side Marker Lts: (2) Whelen M6 LED Red Running/Turn, ILOS***	***1***
	Running to be wired as Tail and Turn to be wired as Stop.	
	These are to both have flanges.	
05-PH-LF20	***|-- M6 Series Flange, Chrome Plated, Std: Each***	***2***
05-EL-2414	***|-- Whelen M6 Series, Tail Lights***	***1***
05-EL-2420	***|-- Stop/Tail, Whelen M6 Series, LED, Pair***	***1***
05-EL-2426	***|-- Turn, Whelen M6 Series, LED, Pair***	***1***
05-EL-2432	***|-- Back up, Whelen M6 Series, LED, Pair***	***1***
05-PH-LF24	***|-- M6 Series Flange, Chrome Plated, Std: Three Pair***	***1***
06-ZZ-ZZZZ	|--	1
05-EL-43SR	***Third (3rd) Brake Light: Kinequip KFL-3BLO1 LED***	***1***
	LOCATION: Over Rear Access Doors.	
	Do not cut traditional hole.	
	Just screw and wire holes required.	
05-EL-43T2	|-- Light is to steady burn, no flash	1

PART NO	DESCRIPTION	QTY
05-EL-4584	***SCENE/FLOOD LIGHTS (LED-M9 Series)***	***1***
05-EL-45L4	***|-- Left Scene Lights: (2) LED-M9, Chrome Flange Whelen***	***1***
	Chrome Flange provided with purchase of Light.	
05-EL-0224	***|-- Flanges: Above M9 Scene lights, Incorporated into lights***	***1***
06-EL-18LF	***|-- Left Flood Activate: Left Flood Switch***	***1***
05-EL-45T4	***|-- Right Scene Lights: (2) LED-M9, Chrome flange Whelen***	***1***
	Chrome Flange provided with purchase of Light.	
05-EL-0224	***|-- Flanges: Above M9 Scene lights, Incorporated into lights***	***1***
06-EL-18RT	***|-- Right Flood Activate: Right Flood Switch and open CSE Door***	***1***
05-EL-46R4	***|-- Rear Load Lights: (2) LED-M9, Chrome flange Whelen***	***1***
	Chrome Flange provided with purchase of Light.	
05-EL-0224	***|-- Flanges: Above M9 Scene lights, Incorporated into lights***	***1***
06-EL-18RE	***|-- Activate: Rear Flood Switch, Reverse and Lead RA Door***	***1***
05-HA-0654	***Secondary Heat/AC: Danhard 125VAC System, 50-3000***	***1***
	All underbody components must be mounted ahead of rear axle if Possible.	
	With Danhard thermostat 50-2310 mounted in A/A	
	Danhard Located in Squad Bench	
05-HA-065J	***|-- Danhard Digital Thermostat remote mounted included***	***1***
	Location:	
05-HA-065L	***|-- Danhard Compressor/ Condensor Mounted Underbody Forward of Axle***	***1***
05-HA-1501	Espar Heater System: None	1
05-HB-13XL	***HVAC SYST:HWP Pro-Air Hepa-Max, Ducted in Ceiling - X Dodge w 2nd comp***	***1***
	with Intermotive module #CVC502-A (AIRC-CLUTCH)	
	System for Dodge series chassis type 1 X series with 2nd AC compressor installed IATS	
04-VP-001G	***|-- Electric Water Valve For Heater units***	***1***
05-HA-070X	***|-- FILTER, Return Air: HEPA Merv-17 Horizontal 10" x 20" X series***	***1***
05-HA-14R0	***|-- Hella Relay Connector: Installed***	***1***
05-HA-2005	***|-- Patient Ventilation System:4 inch Power Intake, 4 inch Power Exhaust STD***	***1***
05-HB-14QX	***|-- AC Evaporator: Pro-Air MAXX w/ dual fans***	***1***
05-HA-1101	***|-- Condensation Drain Pan: Internal ABS***	***1***
05-HA-1404	***|-- Heater Hoses: EPDM - Nomex Rubber (per Ford QVM)***	***1***
05-HA-140P	***|-- AC Hoses: Burgaflex Dual Clip, Hose and fitting system***	***1***
05-HA-14A0	***|-- Side Plenum Grille, Return Air: Stamped Powder Coated Steel***	***1***
05-HA-14B1	***|-- Filter, Washable Carbon Pre-Filter***	***1***
05-HC-14CD	***|-- 2nd AC Comp Techni Bracket Install by 3rd party, Dodge Diesel w 2 Alt IATS***	***1***
	Vehicle transported to facility for 2nd AC compressor, Bracket, Drive belt and	

PART NO	DESCRIPTION	QTY
	installation. Coordinate with engineering at earliest opportunity prior to production assembly start.	
	this system for RAM DIESEL , with Dual Alternator,	
	Tekni bracket, 9382, TM 21 compressor	
	>> Bracket requires preventative maintenance to preserve warranty terms. Check the Techni website for details.	
10-HA-0304	***|-- Thermostat, Rear A/C, Digital, Class 1 LX-1, Includes Front Also***	***1***
	Thermostat located in A/A	
05-IL-00X1	***Ceiling Panels; white Aluminum Composite (2) piece X series***	***1***
	MATL-CEILING	
05-IL-01XR	***|-- Dome Lts, LED "LIGHT RAIL" 7' 6" system White LED, Red LED X -Series***	***1***
	MTB NOTE: Requires X-Series Roof Structure design	
05-IL-05T1	|-- Timer, Constant Hot, Check out, Class 1 Multiplex System	1
	Activated with opening of either C/S or Rear Entry Doors.	
06-EC-0914	|-- 15 Minute Activation	1
	Light Circuit to stay on for 15 minutes when entry door is opened.	
06-EC-09P3	***|-- Timer to Power: Light Rail***	***1***
09-MH-0801	***|-- IV Hook No 1: CPI Rubber IV 2008-1(Recessed Mount), ILOS***	***1***
29-MH-1000	***|-- LOCATION: Over head/chest area, primary patient on COT***	***1***
09-MH-0802	***|-- IV Hook No 2: CPI Rubber IV 2008-1(Recessed Mount), ILOS***	***1***
09-MH-08P2	***|-- LOCATION: OH /chest area, secondary patient on S/B***	***1***
09-MH-2AC5	|-- Recessed C/S Grab Rail, ceiling: 1.25 Dia..... 3 pt, 72in, Gray Anti microbial	1
	Grab Rail will be recessed in a ABS pan.	
09-MH-2ASX	|-- Recessed S/S Grab Rail, ceiling: 1.25 Dia..... S/S, 3 pt, 72in, Gray X-series	1
	Grab Rail will be recessed in a ABS pan.	
	Insulation PKG: X-Series units	**1**
05-IN-3STX	|-- Insulation: All Module Doors, 2" Black Foam, X-Series units #INSU-ARM2	1
05-IN-3STY	|-- Insulation: All Module Doors, Black Sound Proofing, X-Series units #INSU-KSU	1

PART NO	DESCRIPTION	QTY
05-IN-4ST9	***|-- Insulation Sound Deadening: Generation 9 Floor***	***1***
	Generation 9 Floor Design	
05-IN-5STX	|-- Insulation: Walls/Ceiling, 1" Black Foam, X-Series units	1
	#INSU-ARM1	
05-IN-6STX	***|-- Stepwell Insulation: Urethane Froth Insulation, STD X-Series units***	***1***
	MTB to spray urethane froth insulation, underside of step well area	
	MTB option #7208738	
05-IN-6SXS	|-- Black Sound Proofing, Doors & Select Walls, X-Series units	1
	INSU-KSU	
05-IN-6SXT	|-- Insulation: Circumferential PKG, 1LEF Reflective, X-Series units	1
	#KSU-F1250	
05-LB-6240	***|-- Front of Module M Series LED System - 92" and wider***	***1***
	MOUNT ON ARCTIC WEDGE CONDENSER	
	CONFIGURE R WR WR W RW WR R	
05-LB-6624	***|-- Whelen, M9 Series LED***	***1***
05-LB-6895	***|-- Flasher for LED front of module***	***1***
05-PM-LT25	***|-- Light: Whelen M9, LED, Split RED/WHITE LED/CLEAR Lens, Programmable IATS***	***4***
	SIDE TO SIDE SPLIT M9'S. SET FLASH PATTERN TO LONG BURST SIDE TO SIDE	
05-PH-LF10	***|-- M9 Series Flange, Chrome Plated, Std. Each***	***4***
25-PH-LT84	***|-- LED Lights: Programmable, Single Light***	***4***
05-LB-6900	***|-- Alternative Lightbar Switching, Prim/Sec***	***1***
05-PA-LB0B	|-- Rear Light Bar: NONE	1
05-SY-LTMH	***M SERIES LED WARNING LT SYSTEM - Dodge LTD***	***1***
05-FS-0712	***|-- Flasher: None, All M Series LED's Are Programmable***	***1***
05-FS-10P4	***|-- Flash Pattern: LONG BURST***	***1***
11-ZZ-0909	***|-- CAAS GVS Exception to C.8.2.12 Warning lights non-compliant to Table 1 dual mode***	***1***
	The Warning lights pattern chosen by the Customer does not meet either the required photometric output flash or the pattern required of Table 1, Dual mode, Primary Secondary of CAAS C.8.2.12. An exception has been taken for only this element to the standard.	

PART NO	DESCRIPTION	QTY
06-SW-PS01	*|-- Warning Light SWITCH: center console, Primary / Secondary*	*1*
11-ZZ-0909	*|-- CAAS GVS Exception to C.8.2.12 Warning lights non-compliant to Table 1 dual mode*	*1*
	The Warning lights pattern chosen by the Customer does not meet either the required photometric output flash or the pattern required of Table 1, Dual mode, Primary Secondary of CAAS C.8.2.12. An exception has been taken for only this element to the standard.	
05-PH-LJ01	*|-- Primary Grille lights, Dodge on Grille*	*1*
	X PATTERN RED AND WHITE	
05-PH-LT06	*|-- (2) Grille Lights: Whelen TIRLIN3, LED, Chrome Hsg*	*1*
05-FS-10Z3	*|-- Program #7 For Red's and #8 for Clears*	*1*
05-PH-LT0A	*|-- Lights: (2) Whelen TIRLIN3, RED LED, Chrome Hsg*	*1*
05-PH-LT0H	*|-- Additional Lights: (2) Whelen TIRLIN3, WHITE LED, Chrome Hsg*	*1*
05-PM-LE50	*|-- (2) Intersection Lights: Whelen M7 Series, LED*	*1*
05-PM-LN14	*|-- Flanges, Chrome : Intersection M7*	*1*
05-PM-LR32	*|-- LED M7 Red/White Split - Pair*	*1*
05-PM-LRC1	*|-- Light, Whelen LED M7 Red/White LED/Clear Lens - Programmable ILOS*	*2*
05-FS-1212	*|-- Opt A Programmable Lights Split Color - Color 1 Flashes Opposite Color 2*	*2*
05-PM-LF70	*|-- (1) Center Front Body Light: Whelen M9 Series, LED*	*1*
05-PH-LF10	*|-- M9 Series Flange, Chrome Plated, Std. Each*	*1*
05-PM-LRK1	*|-- Light: Whelen M9, LED, WHITE LED/CLEAR Lens, Programmable ea ilos*	*1*
25-PH-LT84	*|-- LED Lights: Programmable, Single Light*	*1*
05-PM-LG70	*|-- (2) Outer Front Body Lights: Whelen M9 Series, LED*	*1*
05-PH-LF12	*|-- M9 Series Flange Chrome Plated, Std: Pair*	*1*
05-PM-LRK3	*|-- Light: Whelen M9, LED, RED LED/CLEAR Lens, Programmable ILOS*	*2*
25-PH-LT84	*|-- LED Lights: Programmable, Single Light*	*2*
05-PM-LH70	*|-- (4) Upper Side Body Lights: Whelen M9 Series, LED*	*1*
05-PH-LF14	*|-- M9 Series Flange, Chrome Plated, Std: Two Pair*	*1*
05-PM-LRK3	*|-- Light: Whelen M9, LED, RED LED/CLEAR Lens, Programmable ILOS*	*4*
25-PH-LT84	*|-- LED Lights: Programmable, Single Light*	*4*
05-PM-LI30	*|-- (2) Rear Intersection Lights: Whelen M6 Series, LED*	*1*
05-PH-LF20	*|-- M6 Series Flange, Chrome Plated, Std: Each*	*2*
05-PM-LQ32	*|-- LED M6 Red/White Split - Pair*	*1*
05-PM-LRH9	*|-- Light: Whelen M6, LED, RED/WHITE LED/CLEAR Lens, Flash, ILOS*	*2*
05-FS-1212	*|-- Opt A Programmable Lights Split Color - Color 1 Flashes Opposite Color 2*	*2*
05-PM-LJ70	*|-- (2) Outer Rear Body Lights: Whelen M9 Series, LED*	*1*
05-PH-LF12	*|-- M9 Series Flange Chrome Plated, Std: Pair*	*1*

PART NO	DESCRIPTION	QTY
05-PM-LRK3	***|-- Light: Whelen M9, LED, RED LED/CLEAR Lens, Programmable ILOS***	***2***
25-PH-LT84	***|-- LED Lights: Programmable, Single Light***	***2***
05-PM-LK70	***|-- (2) Additional Rear Body Lights: Whelen M9 Series, LED***	***1***
05-PM-LT6B	***|-- Location: REAR, (1) aligned w/ EACH upper window in RA doors.***	***1***
05-PM-LT05	***|-- Light: Whelen M9, LED, RED LED/CLEAR Lens, Programmable iats***	***2***
05-PH-LF10	***|-- M9 Series Flange, Chrome Plated, Std. Each***	***2***
25-PH-LT84	***|-- LED Lights: Programmable, Single Light***	***2***
05-PM-LL30	***|-- (1) Center Rear Body Light: Whelen M6 Series, LED ILOS***	***1***
05-PH-LF20	***|-- M6 Series Flange, Chrome Plated, Std: Each***	***1***
05-PM-LQ06	***|-- LED M6 Amber - Each***	***1***
05-PM-LRG	***|-- Light: Whelen M6, LED, AMBER LED/CLEAR Lens, Flash, ILOS***	***1***
25-PH-LT84	***|-- LED Lights: Programmable, Single Light***	***1***
05-PN-KPM0	***|-- Additional Kick Plate Lts, On Rear : NONE***	***1***
05-PZ-09B4	***|-- LED Program Switch : NONE***	***1***
05-ZZ-ZZZZ		1
	ELECTRICAL - CELL 3	1
06-00-0004	|-- Customer Supplied Part(s) : NONE	1
06-00-0001		1
06-AA-0210	|-- Flasher, Headlight: NONE	1
06-BA-3F41	Batteries: 2 - Battery System - Type I Diesel only	1
06-BA-3F53	|-- Batteries: (2) Underhood (Type I)	1
06-BA-3FJ1	|-- Battery Make: (2) OEM	1
	Battery Brand must match.	
06-BA-Q631	***|-- Battery Switch: Cole Hersee 2484-16 Paddle, T1 center console***	***1***
	Cole Hersee Paddle style battery switch powers up and shuts down the CONVERSION only! Chassis related circuits shall remain wired in the OEM configuration per Ford QVM Bulletin No 63.	
	SWITCH LOCATION: Drivers' side of center cab console.	
06-BA-3FW4	|-- Batteries Wired: Parallel for higher amperage	1
06-DA-DOM	Dash Light : NONE	1
06-EC-056X	POWER Door Locks: Module Doors, X-Series Units	1
06-EC-0506	|-- Door Locks, Tied into OEM System X series	1
	Module power locks are tied to the Chassis power lock system	

PART NO	DESCRIPTION	QTY
06-EC-0512	|-- OEM Key Fob: Included w/Chassis Unlock Mod Doors	1
	Must also operate the Module Power Door Locks Optioned.	
06-EC-05B9	|-- Door Lock Switches : Integrated in Interior Entry door Handles -x	1
06-EC-05M0	|-- ONLY the following doors shall have power door locks:	1
06-EC-05X0	|-- Electric Door Lock: (M-1A) Upper Left Front Compartment,	1
06-EC-05X1	|-- Electric Door Lock: (M-1) Left Front Compartment	1
06-EC-05X2	|-- Electric Door Lock: (M-2) Left Middle Compartment	1
06-EC-05X4	|-- Electric Door Lock: (M-3) Left Rear Compartment	1
06-EC-05X6	|-- Electric Door Lock: Rear Access Doors	1
06-EC-05X7	|-- Electric Door Lock: (M-5) Right Rear Compartment	1
06-EC-05XA	|-- Electric Door Lock: Curbside Access Door	1
06-EC-05XB	|-- Electric Door Lock: (M-7) Right Front Compt	1
06-EC-081X	|-- Remote Keypad #1: Installed, Horizontal X-Series Units	1
	MTB to cut mounting holes per provided drawing.	
06-EC-0816	***|-- Location: By Curbside Door***	***1***
06-EC-3008	***|-- Backeye 360 4 camera and 7" monitor system - Brigade***	***1***
	Each system request requires management review. > System may not work as well for Medium duty vehicles.	
	>>	
	Body side cameras mounted high at center of Truck (Bumper to Bumper)	
	(1) rear camera	
	(1) front camera mount at front grille.	
	(1) 7" monitor with supplied windshield adhesive mount.	
06-EC-300G	***|-- Brigade monitor attached to console***	***1***
12-B0-0004	***|-- Painted Part- Painted Special color to match Body***	***4***
06-EC-4300	Back-up Alarm: Standard 102DB	1
06-EC-43B0	|-- Cut Off Switch: Auto reset ,momentary style	1
06-EC-CCX4	***Circuit Board, 12V: Multiplex LX1 Dodge 4/5500 X-Series STD***	***1***
	includes the following standard items;	
	Rear Digital Thermostat/Control for A/C, includes front also	
	Door Open 15, minute check out timer for 15	
	Oxygen Contents Gauge front and back	
	(5) Minute Auto Battery Switch Shutdown (Kill Circuit)	
06-EC-1304	|-- Voltage Monitor, LX-1, w/ Warning Light	1
06-EC-2215	|-- LX-1 Standard Module door Open Alarm and Icon on Front Display	1
06-EC-31FX	|-- Back Up Camera: > White <<Adjustable ASA, Tied to Multiplex ,	1
	X-Series units	
06-EC-CB07	|-- Circuit Protection, 12V: FET - Auto-reset	1
06-EC-SPA7	|-- LX1 Main Switch Panel Location : Front Display 7 inch full color w	1
	buttons STD	

PART NO	DESCRIPTION	QTY
06-EC-SPAA	***|-- On Cab Console with ramp wedge F series***	***1***
	DO NOT ANGLE TOWARD DRIVER	
06-EC-SPA8	|-- In Cab Console	1
06-EC-SPZ0	|-- Patient Area LX1 Panel:	1
06-EC-SPZ1	|-- Pt Area LX1 Switch Panel: One Standard In Patient Compartment	1
06-EC-SPA1	|-- Switch Panel Located: Streetside A/A	1
06-EC-SP70	|-- Patient area switch panel mounted :flat to action wall std	1
06-EC-SPZ9	|-- 2nd Patient Area Switch Panel: NONE	1
06-EC-SPZC	|-- 3rd Patient Area Switch Panel: NONE	1
06-FS-1106	|-- Sequencer, LX1, with load manager,	1
06-RR-240X	|-- Type I - CAB Wood Console: Pass Thru - 14" OAW ILOS	1
07-RR-24A0	|-- Console Finish: Black, Textured "Easy Grip"	1
07-RR-020F	***|-- Add-on Console: Type 1***	***1***
07-RR-02A0	***|-- Drink Holder: (2) In Add-on Console, Big Gulp Size***	***2***
07-RR-02A5	***|-- Drink Holder Location: Front***	***2***
07-RR-02F0	***|-- Note Book Slot: Single - Full width by 6" wide***	***1***
07-RR-02F3	***|-- Double removable Lexan Divider(s)***	***1***
07-RR-0512	***|-- Armrests, Padded: Adjustable Height Pair, Black***	***1***
07-RR-2301	***|-- Customer Radio: Space for Customer installed Radio Heads***	***1***
07-RR-2354	***|-- Glove Storage: (3) Glove Box Storage Across Rear of add on console***	***1***
07-RR-24A0	***|-- Console Finish: Black, Textured "Easy Grip"***	***1***
06-EC-GR01	Ground Straps, Module to Frame: (Qty 4) Braided	1
06-IG-0250	***Inverter : Vanner LIFESINE 1100 Pure Sine Wave, w 55watt 3 stage charger***	***1***
06-EC-03AS	***|-- Portable Equip Charging Circuits: Included in Inverter***	***1***
06-EC-03AA	***|-- PREWIRE LOCATION: (1)Cab Console, (1) Behind A/A***	***1***
06-EC-03C9	***|-- Portable Equip Pwr Source: Ignition and/or Shoreline***	***1***
06-IG-03A0	***|-- Battery Charger/Conditioner: 55A - Built into Inverter***	***1***
06-IG-0003	***|-- Built-in Battery Charger: Enable - Wire to Batteries***	***1***
06-IG-04L7	***|-- Inverter Location: M-1A (ULF) Compartment***	***1***
	COMMUNICATION RADIO(S) RELATED	**1**
06-00-0001	|--	1
	RADIO POWER	**1**
06-EC-03A0	|-- Radio Power No 1: 30A, Pos and Neg, 10 awg Wires	1
06-EC-03B0	|-- Radio Power Source: Battery Switch Hot	1
06-EC-03G0	|-- LOCATION: Behind Passenger's Seat	1
06-EC-03A2	|-- Radio Power No 2: 30A, Pos and Neg, 10 awg Wires	1
06-EC-03B0	|-- Radio Power Source: Battery Switch Hot	1
06-EC-03E0	|-- LOCATION: Behind Action Area Board	1
	ANTENNA LEADS	**1**
06-RR-0100	|-- Coaxial Cable, No 1: Type RG-58U, No connectors	1

PART NO	DESCRIPTION	QTY
06-RR-01O1	|-- ORIGINATION POINT: Roof Port No 1	1
	Roof Port No 1 is lined up with the edge of the curbside entry door, and centered side to side as possible	
06-RR-01P0	|-- Port Plate: None - Access thru center upholstery panel	1
06-RR-01T1	|-- TERMINATION POINT: Behind Passenger's seat w/ 36" Tail	1
06-RR-0101	***|-- Coaxial Cable, No 2: Type RG-58U, No connectors***	***1***
06-RR-01O2	***|-- ORIGINATION POINT: Roof Port No 2***	***1***
	Roof Port No 2 is located approximately 24 inches back rearward of roof port #1.	
06-RR-01P0	***|-- Port Plate: None - Access thru center upholstery panel***	***1***
06-RR-01T2	***|-- TERMINATION POINT: Behind Action Area Box w/ 36" Tail.***	***1***
06-RR-1809	|-- Patient Area Radio : None	1
06-SO-0000	125V SHORE LINE AND OUTLETS	1
06-00-0001	|--	1
06-SO-0500	***|-- Shore Line Inlet: 20A Super Auto Eject, ILOS***	***1***
06-SO-00L1	***|-- Inlet location: Aft of Left Front compartment***	***1***
06-SO-1005	***|-- Cover, Yellow, Shore Line Inlet : 20A Super Auto Eject, STD***	***1***
06-SO-10TT	***|-- Inpower Timer: VCM-05-01SF, Installed***	***1***
	NOTE: This allows the auto eject to be wired to the ignition switch In lieu of splicing into the OEM starter circuit and is required any this vehicle	
06-ZZ-ZZZZ	|--	***1***
06-SO-0400	***|-- Shore Line Inlet No 2: 20A Super Auto Eject, IATS***	***1***
06-SO-00L2	***|-- Inlet location (IATS): Above M-2, Aft of M-1 compartment***	***1***
06-SO-1005	***|-- Cover, Yellow, Shore Line Inlet : 20A Super Auto Eject, STD***	***1***
06-SO-10TT	***|-- Inpower Timer: VCM-05-01SF, Installed***	***1***
	NOTE: This allows the auto eject to be wired to the ignition switch In lieu of splicing into the OEM starter circuit and is required any this vehicle	
06-ZZ-ZZZZ	|--	***1***
06-SO-1400	|-- **125 Volt OUTLETS**	1
06-SO-1401	***|-- 125 VAC Outlet, No 1: 15A, Hospital Grade, IVORY***	***1***
	All 125 VAC outlets shall be back lighted when power is applied to the outlet.	
06-SO-14L1	|-- LOCATION: Action Area, standard location	1
06-SO-14O2	|-- Outlet mounting ORIENTATION: Vertical	1
06-SO-1402	|-- 125 VAC Outlet, No 2: 15A, Hospital Grade, IVORY	1
06-SO-14L3	|-- LOCATION: RF ALS, (See Drawing)	1
06-SO-14O2	|-- Outlet mounting ORIENTATION: Vertical	1
06-SO-1100	**INTERIOR 12 Volt OUTLETS**	1
06-SO-1101	***|-- 12V Outlet, No 1: Power Point Double Outlet- Wire thru Med Isolator***	***1***
06-SO-11L1	|-- LOCATION: Action Area, standard location	1

PART NO	DESCRIPTION	QTY
06-SO-14O2	|-- Outlet mounting ORIENTATION: Vertical	1
06-SO-1910	|-- Power Source: Medical Isolator , Batt Sw Hot	1
06-SO-1103	***|-- 12V Outlet, No 3: Power Point - Single -Wire thru Med Isolator***	***1***
06-SO-11L3	***|-- LOCATION: RF ALS, (See Drawing)***	***1***
06-SO-14O2	***|-- Outlet mounting ORIENTATION: Vertical***	***1***
06-SO-1913	***|-- Power Source: The SAME as outlet No 1***	***1***
06-SO-1161	***|-- 12V Outlet, DUAL USB Fast 4.8A,. 2.4 A per slot Round IATS EACH***	***1***
	Includes waterproof cover.	
	DUAL USB outlet	
26-SO-11L5	***|-- LOCATION: In Cab Console***	***1***
06-SS-070D	***Siren: Whelen, WS295HFSC9, Dodge ILOS***	***1***
06-SS-FC16	***|-- Siren Spkr: CPI, Throuh the Bumper SAD/P3821-19 - D35/45/5500***	***1***
	ILOS 2019+	
	This speaker is a surface mounted siren speaker.	
06-SS-SW01	***|-- Siren / OEM Horn Switch: In Cab Console***	***1***
	Siren Functions OR OEM Horn	
06-SS-SY01	Air Horn System: NONE	1
	CABINET SHOP - Modular	**1**
07-00-0001	ALL DIMENSIONS ON ORDER WILL HAVE A VARIABLE OF + OR - 1/4"	1
	Unless specified as a minimum dimension.	
	*****Aluminum Composite Cabinet Configuration 172 Type 1**	**1**
07-00-0006	|-- Rubber Cactus Mat : On Cabinet Floors, Drawers & Shelves, X-Series units	1
07-00-0030	|-- Aluminum Cabinet Backer-Sound Barrier	1
	# INSU-KSU on back side of aluminum cabinets	
07-00-MB90	|-- Interior Color Packages	1
07-00-MC9B	***|-- Mica Colors: Gloss Fashion Gray over Stainless Steel***	***1***
	Parting Line: C/S: Top of squad bench including rear filler.	
	S/S: To CPR side seat.	
	Stainless Steel on above areas only. No other cabinet gets stainless, unless specified otherwise below.	
07-AS-1200	***|-- Stainless Steel - FACE of Squad Bench including rear filler***	***1***
	End of squad bench shall be MICA.	
07-AS-1400	***|-- Stainless Steel - Lower Face of Wall Cabinet - Included***	***1***
07-00-PC0P	***|-- Polycarbonate Type/Color: Lexan - Gray Secure Latch***	***1***
	Note; For any secure latch window requested where a cabinet opening width is 20 inches or less, the secure latch window will be questioned at ordering.	

PART NO	DESCRIPTION	QTY
07-00-PH01	***|-- Window Handles: Full Length Extruded***	***1***
07-01-SXJ6	***|-- EVS 1900 Exec Seat All Black Per4Max Black Belt X ILOS***	***1***
	Per4max >> Black <<belt	
	No recline feature	
07-SE-02X9	***|-- BASE: Swivel base for EVS Executive Seat Option X series ILOS***	***1***
11-SE-0505	***|-- Attendant Seat, Armrests, BOTH LEFT and RIGHT ARMS EVS Exec series x***	***1***
	SEAT-EVSARMS	
07-AC-4500	|-- AC CABINET: Evaporator,Location : Bulkhead X Series STD composite Over Walkthru	1
	Composite Construction	
07-CA-03XA	***|-- CURBSIDE UPPER: Over Squad Bench with Aluminum White Liners X -IATS***	***1***
07-CU-X107	***|-- Cabinet K1 & K2: (2) Openings with flush center divider***	***1***
07-DR-LXX2	***|-- (K) Door: Single Flip Up 3/8" Lexan***	***2***
07-DR-LZ20	***|-- Hinges: Reel Torque***	***2***
07-HW-SO1	***|-- Round Pull Latch: Non-locking - Chrome Finish ILOS***	***2***
11-X0-0010	***|-- Stowage rating label - Southco round latch 10 pounds applied each***	***2***
07-CA-04A8	***|-- Cabinet, (3) Glove Storage, over C/S Entry Door***	***1***
07-DR-LX04	***|-- Door: Overlay He, 3/8" Lexan - 3-glove dispense thru***	***1***
07-HW-SO1	***|-- Round Pull Latch: Non-locking - Chrome Finish ILOS***	***1***
11-X0-0010	***|-- Stowage rating label - Southco round latch 10 pounds applied each***	***1***
07-CA-04B0	|-- CURBSIDE REAR STORAGE CABINET: NONE	1
07-LF-6403	***|-- LF Cabinet, Behind Att Seat: Cabinet "H"/(Elec Cab) Composite, X-ILOS***	***1***
07-CA-VEN7	***|-- Plastic Vent: (2) Total, 1 column x 8 row, Vent 01***	***1***
07-DR-WD0	***|-- Door, Single Solid Flush Fitted Electrical Area***	***1***
07-CA-2100	***|-- TRIM: U-shaped Door, J-trim opening***	***1***
07-HW-HIN1	***|-- Hinge: 1 1/2" Stainless Steel Piano Hinge***	***1***
07-HW-SO1	***|-- Round Pull Latch: Non-locking - Chrome Finish ILOS***	***1***
11-X0-0010	***|-- Stowage rating label - Southco round latch 10 pounds applied each***	***1***
07-RF-4500	|-- RF ALS Cabinet: Aluminum Composite Construction	1
	X-Series Design with 45°	
07-CA-04AY	***|-- X series Angled Glove at RF ALS not required***	***1***
07-RF-0003	|-- Interior Color: White Anti-Microbial Powder Coated	1
07-RF-I1X0	|-- Cabinet I-1: Standard, Aluminum Composite Construction	1
07-DR-LXXA	|-- Door: Single Flip Up 3/8" Lexan	1
07-DR-LZ20	|-- Hinges: Reel Torque	1
07-HW-SX11	|-- Round Pull Latch: Non-locking - Chrome Finish	1

PART NO	DESCRIPTION	QTY
11-X0-0010	|-- Stowage rating label - Southco round latch 10 pounds applied each	1
07-RF-I2X0	***|-- Cabinet I-2: Standard, Aluminum Composite Construction***	***1***
	SPLIT I1 AND I2 50-50	
07-DR-LXXB	|-- Doors, Dual, Overlay Hinged, 3/8" Lexan - RF ALS Cabinet	1
07-HW-SX15	|-- Dual Round Pull Latches: Non-locking - Chrome	1
11-X0-0010	|-- Stowage rating label - Southco round latch 10 pounds applied each	2
07-RA-IOA1	|-- Outside Access: Thru M-7 (RF) Compartment door.	1
07-RF-0001	|-- Interior MICA Color: White cabinet liner	1
07-TS-12X2	|-- Shelf Track: Small Alum. Unistrut, X-Series, RF ALS cabinet	1
07-CA-06VB	***|-- (1) Shelf: Adjustable, Aluminum, White Anti-Microbial coated***	***1***
07-CA-06VB	***|--***	***1***
07-RF-I3X0	|-- Cabinet I-3: X Standard, Aluminum Composite 15" Interior Height.	1
07-DR-LXX7	***|-- Doors Dual, Overlay Hinged, 3/8" Lexan - Large Cabinet***	***1***
07-DR-LZ10	***|-- Hinges: Stainless Spring Loaded***	***1***
07-HW-SX15	***|-- Dual Round Pull Latches: Non-locking - Chrome***	***1***
11-X0-0010	***|-- Stowage rating label - Southco round latch 10 pounds applied each***	***2***
07-RA-IOA1	|-- Outside Access: Thru M-7 (RF) Compartment door.	1
07-RF-0001	|-- Interior MICA Color: White cabinet liner	1
07-TS-12X2	***|-- Shelf Track: Small Alum. Unistrut, X-Series, RF ALS cabinet***	***1***
07-CA-06VB	***|-- (1) Shelf: Adjustable, Aluminum, White Anti-Microbial coated***	***1***
07-RR-0064	|-- Right Rear Cabinet: Cover over M-5 Compartment	1
07-SB-4500	|-- SQUAD BENCH: Aluminum Composite Construction X Series	1
07-SB-1002	***|-- Bio-waste/Sharps No 1: Gray ABS Rim, Red Lexan Cover***	***1***
07-SB-1003	***|-- LOCATION: At head of Squad Bench***	***1***
07-SB-1004	***|-- SHARPS CONTAINER: 3-Quart sharps container - ILOS***	***1***
07-SB-1005	***|-- WASTE CONTAINER: 6 Quart std***	***1***
07-SB-1001	***|-- Storage Under Lid - Configure to NO M-6 Compartment Size***	***1***
07-SB-LIDY	***|-- Squad Bench Lid: Single, One pc, 1-section***	***1***
07-SB-LH00	***|-- Hinge, Squad Bench Lid(s): Butt Style Hinges***	***1***
07-SB-LH03	***|-- Lid Checks: Gas shock, Dual Action***	***1***
07-SB-LH07	***|-- Latch, Squad Bench Lid: Slam Action Paddle, W keeper***	***1***
11-X0-0030	***|-- Stowage rating label - Squad bench interior, entire area 80 lbs***	***1***
07-TR-SB01	***|-- Edge Trim, Lids: Band w/ Laminate and J-Trim Protection***	***1***
08-MH-1400	|-- Restraint Net, Black, 7 point detachable, at head of S/B, Mod Seven (7) NET Attachment Points: Black in color. NETS-MOD2	1
07-TC-4500	|-- TOP CABINETS, - w/ 72" HR, Aluminum Composite Construction X STD	1
07-TC-A450	***|-- Cabinet A: 72" HR Aluminum Composite X std***	***1***
	MAKE AS TALL AS POSSIBLE	

PART NO	DESCRIPTION	QTY
07-CB-DR71	***|-- Doors; Cabinet Secure Latch Restocking Sliding Window Top hinged x Optional***	***1***
	Optional upgrade	
11-X0-0016	***|-- Stowage rating label Secure Latch Restocking Sliding Window 30 pounds applied***	***1***
07-TS-12X0	|-- Shelf Track: Small Alum. Unistrut, X-Series	1
07-CA-06VB	|-- (1) Shelf: Adjustable, Aluminum, White Anti-Microbial coated	1
07-TC-B450	|-- Cabinet B: Ergonomically angled toward the CPR seat (72"HR) X Std	1
07-CB-DR75	|-- Doors; Cabinet B Secure Latch Restocking Sliding Window Top hinged x	1
11-X0-0016	|-- Stowage rating label Secure Latch Restocking Sliding Window 30 pounds applied	1
07-TS-12X0	|-- Shelf Track: Small Alum. Unistrut, X-Series	1
07-CA-06VB	|-- (1) Shelf: Adjustable, Aluminum, White Anti-Microbial coated	1
07-WC-0000	|--	1
07-WC-4500	|-- WALL CABINET: CPR Seat w/Telemetry, Aluminum Composite Construction X	1
07-WC-AAX	|-- Action Area: Standard	1
07-CA-480X	***|-- 1/2" Solid Surface A/A Tray X-Series STD***	***1***
07-CA-480Y	|-- Solid Surface : Specify Color of Tray ??????????????????????	1
	The tray shall have a lip The tray lip shall come up to the front and overlay the face.	
07-CA-4U08	|-- Solid Surface extension in front of O1 X series std	1
07-WC-AAB	|-- Action Area Board: Black Grip See Station No 6 for content	1
07-WC-O10	|-- Cabinet O1: Standard, Aluminum Composite Construction	1
07-DR-LXX5	|-- (O1)Door: Single Overlay Lexan Hinged Right	1
07-DR-LZ10	|-- Hinges: Stainless Spring Loaded	1
07-HW-SX11	|-- Round Pull Latch: Non-locking - Chrome Finish	1
11-X0-0010	|-- Stowage rating label - Southco round latch 10 pounds applied each	1
07-TS-12X0	|-- Shelf Track: Small Alum. Unistrut, X-Series	1
07-CA-06VB	|-- (1) Shelf: Adjustable, Aluminum, White Anti-Microbial coated	1
07-CA-06VC	***|--***	***1***
07-WC-C64X	***|-- Cabinet C: Aluminum Composite Construction***	***1***
07-CB-DR7C	***|-- Doors; Cabinet C Secure Latch Restocking Sliding Window Left Side Hinged X***	***1***
	Left Side hinged, Damper assist. (1) WIND-CFBD custom sized	
11-X0-0016	***|-- Stowage rating label Secure Latch Restocking Sliding Window 30 pounds applied***	***1***
07-RF-0008	***|-- No Inside Access To Exterior Compartment***	***1***
07-TS-12X0	***|-- Shelf Track: Small Alum. Unistrut, X-Series***	***1***
07-CA-06VB	***|-- (1) Shelf: Adjustable, Aluminum, White Anti-Microbial coated***	***1***

PART NO	DESCRIPTION	QTY
07-WC-D64	|-- Cabinet D: Ergonomically Angled Over Telemetry, Alum Composite Construction	1
07-CB-DR7D	|-- Doors; Cabinet D Secure Latch Restocking Sliding Window Top hinged x (1) WIND-CFTG	1
11-X0-0016	|-- Stowage rating label Secure Latch Restocking Sliding Window 30 pounds applied	1
07-TS-12X0	|-- Shelf Track: Small Alum. Unistrut, X-Series	1
07-CA-06VB	|-- (1) Shelf: Adjustable, Aluminum, White Anti-Microbial coated	1
07-WC-E003	***|-- Cabinet E: DELETE***	***1***
07-WC-F64X	|-- Cabinet F: Standard, Aluminum Composite Construction	1
07-CB-DR7F	***|-- Doors; Cabinet F Secure Latch Restocking Sliding Window Bottom hinged x*** Bottom hinged, Damper assist. (1) WIND-CFBD custom sized	***1***
11-X0-0016	***|-- Stowage rating label Secure Latch Restocking Sliding Window 30 pounds applied***	***1***
07-WC-SS01	|-- CPR Side Seat: 24" inch - Single Position - Standard	1
07-WC-BR0	|-- Back Rest: Fixed to Back Wall of CPR Seat w/clips	1
07-WC-BR0	***|--***	***1***
07-WC-TAX	|-- Telemetry Area: with armrest pad	1
07-CA-49X0	|-- 1/2" Solid Surface Telemetry Area Tray: X-Series STD	1
07-CA-480Y	|-- Solid Surface : Specify Color of Tray ?????????????????????? The tray shall have a lip The tray lip shall come up to the front and overlay the face.	1
08-SE-1702	|-- P4 - 4-Point PER4MAX Restraint System - W/CPR	1
08-SE-1820	***|-- (2) on Squad Bench, (1) CPR Side Seat Per4Max Black Belts*** Belt retractors must mount below the top of the seat. BELT-F151390	***1***
08-SE-SB70	|-- S/B: (3) Sec patient restraints - 9" Sleeves Face of Bench	1
08-SE-SB76	|-- S/B: (3) Sec patient restraints - 5" Sleeves By Hinge	1
00-20-0072	|-- Per4Max Four-Point Seatbelts: Accept and Install Full Feature	1
	CABINET SET - CELL 4 - MOD	**1**
08-00-00CX	|-- Sub Floor, 3/4" Composite, STD	1
08-00-FL3X	***Flooring: Lonpearl - #718, Odessa Black***	***1***
08-00-FL01	***|-- Flooring Main Edge: 3" Recessed (1/2" deep) roll-up***	***1***
08-AS-0001	***|-- Rear Threshold, Stainless, 6" Wide x Full Width at rear doors*** Install safety yellow with diagonal stripes nonskid tape over threshold.	***1***

PART NO	DESCRIPTION	QTY
08-AS-0006	***|-- C/S Stepwell Threshold, Polished Diamond Plate***	***1***
08-CS-0001	COT MOUNT HARDWARE: (Full Size Mod)	1
08-CR-09PL	***|-- Cot Mount: Stryker, No 6390, Power Load, Installed ILOS***	***1***
	Not Compatible with cots other than Stryker!	
	This item priced for Domestic USA usage only.	
	>>> Caution, Power load head consumes floor space toward attendant seat. Spacing review between seat and cot is recommended. >>	
08-CR-09PN	***|-- mass casualty kit not requested***	***1***
08-CR-09Q5	***|-- Cable Extension for Stryker Powerload System***	***1***
	CONN-DTP062S	
	CONN-WP2S 1	
	CONN-SOCKET 2	
08-CR-1002	***|-- 12v power feed location FRONT for Stryker power load 6390***	***1***
	The 12 volt feed will be drilled and fed through the template FRONT hole for a Stryker power load system. The 12volt power shall be brought through the floor, with Heat shrink connectors installed.	
08-CS-00PL	***|-- Cot Position No 1: PRIMARY CENTER POSITION,***	***1***
	Maintain 12" between Cot and S/B.	
08-CS-2000	***|-- Primary Cot position under floor reinforcement***	***1***
	Install 8 inch wide by 5 long 1/2" aluminum reinforcement at primary cot position. (Primary cot position only - REV Std)	
	**If custom location is desired, must be specified below.	
08-CS-3009	***|-- Cot mount set up for: Stryker Power-Pro 6506***	***1***
08-CS-19A5	***|-- Cot Stop, Block: Stryker Power/Performance load. Install hook with kit***	***1***
08-CS-3009	***|-- Cot mount set up for: Stryker Power-Pro 6506***	***1***
08-CS-19U1	|-- Q Straint System: NONE	1
08-OS-04SX	OXYGEN / AIR / VACUUM System: X-Series	1
08-OS-0401	|-- Oxygen Outlet No 1: Amico Console - Ohmeda/Ohio Diamond Style	1
08-OS-040A	|-- LOCATION: Action Area	1
08-OS-0402	|-- Oxygen Outlet No 2: Amico Console - Ohmeda/Ohio Diamond Style	1
08-OS-040A	|-- LOCATION: Action Area	1
08-OS-0403	***|-- Oxygen Outlet No 3: Amico Console - Ohmeda/Ohio Diamond Style***	***1***
08-OS-040E	***|-- LOCATION: Curbside, in head of cabinet, over head of S/B***	***1***
08-OS-090X	|-- Port Cyl Rack No 1: Zico QR-D-2 - D or Jumbo D - No Strap Req	1
	Through bolt the rack to metal.	
08-OS-09L1	|-- Rack Location : Aisle side of RF ALS cabinet	1
08-OS-09L1	***|--***	***1***
08-OS-1331	|-- Rack No 1: Adjustable AEV O2 Rack Green with 4 Ratchet Straps M/H	1
	Fits cylinders 7" diameter or more.	

PART NO	DESCRIPTION	QTY
08-OS-11G1	|-- Cylinder Type: OXYGEN - Green Colored Hose Regulator connection Nut: 9/16" RH thread.	1
08-OS-1301	|-- Rack Location: Left Front, wall #2 near wall #3	1
08-OS-132M	|-- Set up For M cylinder	1
08-OS-1712	***|-- Regulator, Oxygen: Has LX1 Transducer, Inspected and Installed*** Installed on O2 line for pressure test, Regulator and Transducer connected and left installed on Oxygen hose. Tagged with Inspector signature/Date Protected for shipment and left on the hose, Plastic restraint tie to the oxygen bracket for shipment > Required under Change notice 11, July 1, 2018 .	***1***
08-OS-1902	|-- Regulator Wrench: Cast aluminum, OXYGEN w/ cable lanyard	1
08-OS-35ST	|-- Vacuum System: SSCOR regulator/gauge panel in A/A	1
08-OS-3501	***|-- Collection Canister w Clip: Bemis, 1200 CC Capacity -J3043 retention compliant*** LOCATION: In Action Area, to the left of A/A console box. with SSCOR canister retention clip	***1***
08-OS-3502	|-- VAC Plumbing: Direct from panel to canister - NO Outlet	1
08-OS-3503	|-- Vacuum Pump: 49 State	1
08-OS-35L8	***|-- Location: M-1a Compartment***	***1***
	TRIM / DOOR ASSEMBLY - CELL 5	**1**
09-00-002S	|-- Interior window and aluminum trim with standard satin finish- std	1
09-00-000Z	**********Door Department X Series > New	1
02-BT-C85V	|-- Handles, Ext: Tri-mark 1875, Free Float, Polished CNNC finish X-Series	1
02-BT-C85A	***|-- Interior Release: All Entry Doors, with bezel Emergency Access*** All three Entry Doors, top and bottom latches. Bezel installed around emergency release.	***1***
09-B1-ED0X	|-- Entry Door Panels, Windows and Hardware, X-Series Units	1
08-MH-0010	|-- Interior Grab Handle Color: Gray Antimicrobial	1
08-MH-03B3	|-- Grab Handle, CS Entry: 1 1/4" Dia..... S/S, 2-pt 18"L, Gray Antimicrobial	1
08-MH-03D3	|-- Grab Handles, Rear Access: (2) 12"L X 1 1/4" Dia..... S/S, 2-pt, Gray Antimicrob	1
09-AS-2300	***|-- Door Panels: Mica Upper / Upholstery / Stainless Steel Lower*** The mica and stainless are laminated to smooth aluminum.	***1***
09-AS-2520	***|-- Curbside Lower Door Panel: Stainless***	***1***
09-WI-02BX	***|-- "AUTO SHADE" Windows: Upper R/A Doors, Fixed Glass, X-STD 17.3"W x 19.3"H***	***1***

PART NO	DESCRIPTION	QTY
09-WI-06BX	***|-- "AUTO SHADE" Window: Upper C/S Access, Fixed Glass, X-Series STD***	***1***
09-WI-09BX	***|-- Inverter, "Auto Shade" Windows : Part of X series windows*** part MDUL-WINDOW	***1***
09-IN-3STX	|-- Insulation: All Module Doors, 2" Black Foam, X-Series units #INSU-ARM2	1
09-IN-3STY	|-- Insulation: All Module Doors, Black Sound Proofing, X-Series units #INSU-KSU	1
09-MH-2530	***|-- Grab Rail, (1), 18" Gray Antimicrobial Rear Entry Assist std.*** Part No: RAIL-BK18EF Located : Module interior at the rear entry, mounted to the M5 compartment filler. Rail is to be through bolted into M5.	***1***
09-DR-WT04	***Walk through Door: Hinged, Door recessed into side of ALS ILOS*** Walk through door recessed into side of ALS cabinet. Install a barrel bolt to keep the door in the OPEN position and an additional barrel bolt to hold the door CLOSED.	***1***
09-FM-10X3	***Dri-Dek Compt Floors and shelves, Black, STD X-Series***	***1***
09-FM-11X0	***|-- Dri-Dek EDGES: Black, Beveled frontal edges***	***1***
	ELECTRICAL Point to Point - CELL 6	**1**
10-MC-0138	***|-- Knox Box Medvault Large: Recess Mount Model 5530 5530H3RK (2.5)*** Model #5530 recess mounted Features Include: 1. Standard Door 2. Knox WiFi 3. recess mounted WI-FI antennae mounted to rear of box. Does not include administrative KNOXCONNECT cloud based software. Software required to recieve reports. Customer to Purchase KnoxConnect Cloud software from KNOX.	***1***
10-EB-13X2	Cabinet Light(s) : "DAY BRIGHT" LED White Lights, X-Series Units	1
05-IL-13S1	|-- Cab Interior Lights Switching: Thru MultiPlex System	1
10-EB-13Y0	|-- Daybright location 1	1
10-EB-13YA	***|-- Daybright Light Location Cabinet A***	***1***
10-EB-13Y1	|-- Daybright location 2	1
10-EB-13YD	|-- Daybright Light Location Cabinet D	1
10-EB-13Y2	|-- Daybright location 3	1
10-EB-13YB	***|-- Daybright Light Location Cabinet B***	***1***
10-EB-13Y3	|-- Daybright location 4	1

PART NO	DESCRIPTION	QTY
10-EB-13YC	|-- Daybright Light Location Cabinet C	1
10-EB-13Y4	|-- Daybright location 5	1
10-EB-13YO	***|-- Daybright Light Location Cabinet O1***	***1***
10-EB-13Y5	|-- Daybright location 6	1
10-EB-13YI	|-- Daybright Light Location Cabinet I-1	1
10-EB-13Y6	|-- Daybright location 7	1
10-EB-13YM	***|-- Daybright Light Location Cabinet I-2***	***1***
10-EB-13Y7	|-- Daybright location 8	1
10-EB-13YN	***|-- Daybright Light Location Cabinet I-3***	***1***
10-EB-13Y8	|-- Daybright location 9	1
10-EB-13YK	***|-- Daybright Light Location Cabinet K1***	***1***
10-EB-13Y9	|-- Daybright location 10	1
10-EB-13YL	***|-- Daybright Light Location Cabinet K2***	***1***
10-EB-13YV	***|-- Daybright location 11***	***1***
10-EB-13YF	***|-- Daybright Light Location Cabinet F***	***1***
10-EB-13YI	***|--***	***1***
10-IL-02ST	Action Area Light: 12V, LED, Surface Mount	1
10-IL-02L7	|-- Light Location: Action Area	1
	UPHOLSTERY - CELL 7	**1**
11-00-UB95	***Upholstery Color: Black (Black) UPHO-6905***	***1***
	UPHO-6905	
11-00-UC11	***|-- Center Trough Upholstery Color: Color Key to Rest of Truck***	***1***
11-00-UT0X	Uph Joint Type: "PREMIUM " Upgrade-X series Standard	1
11-SB-0005	Squad Bench seat cushion cut-outs: None	1
11-SE-CSPD	Head Protection: Pad over CS Entry Door	1
11-SE-REPD	Head Protection: 2" Pad over Rear Access Doors, Full Width	1
	PAINT - STRIPES - DECALS	**1**
12-PT-UNCT	|-- Undercoating : Per QVM Guidelines, STD	1
12-DC-0001	Reflective Tape: White Reflective On Painted edges of Exterior Door Frame	1
12-DC-GA10	Compartment Finish: Diamond Plate Standard	1
12-PT-0109	***Special Body Colors: RED CHE14:G7C***	***1***
12-DC-0002	***|-- Flip Step Reflective/Prismatic Tape: Red/White/R/W/R/W/R***	***1***
	Install on rearward facing edge of flip up step at rear module entry.	
12-PT-0112	***|-- Tape Stripe: NONE (KKK-F Deviation)***	***1***
11-YZ-0962	***|-- Non-Compliant toKKK-F 3.16.2 ;Exterior Safety stripe to be Orange***	***1***
12-PT-RF01	***|-- Roof Paint: Color and finish quality to be GLOSSY***	***1***
	The roof shall be painted, with a glossy finish, but not sanded and buffed.	
12-PT-2010	***Lettering:AEV DEMO LETTERING PACKAGE***	***1***
12-PT-2020	***|-- Lettering Size:***	***1***
12-PT-2030	***|-- Lettering Color***	***1***

PART NO	DESCRIPTION	QTY
12-PT-2032	***|-- Lettering Shadow: NONE***	***1***
12-PT-2040	***|-- Lettering Font:***	***1***
12-PT-2050	***|-- Unit Number:***	***1***
12-PT-DRIP	Drip Rails: Bright Aluminum, De-burred and rounded corners Include a drip rail over the C/S Entry Door.	1
	DETAIL - SHIP LOOSE ITEMS	1
12-PT-DRIZ	|-- Drip Rails: Detail-Refer to Paint Section for Drip Rail Information Include a drip rail over the C/S Entry Door.	1
13-10-XM00	|-- Owner's Manual USB Flash Drive ship loose	1
13-KK-KDEC	Decals: KKK / DOT Pkg, Blue/White reflective - Ship Loose	1
13-RF-STAS	|-- Decals: 32" Star of Life - Ship Loose	1
13-KK-NSSB	Decals: NO SMOKING & SEATBELT, installed, cab & pt. area.	1
13-KL-0010	AEV Logos: Installed on unit per AEV standard locations	1
13-MH-05ST	***Fire Extinguisher, 5 pound, shipped loose, Std*** Part No: EXTI-01	***1***
11-YZ-0932	|-- Exception to 3.15.2 Required Two fire extinguishers installed by FSAM Fire extinguishers were not installed with one in the driver's cab, one in the patient compartment at the time of departure from the final stage Ambulance Manufacturer. The customer/FSAM has shipped them loose for the dealer to complete the final install.	1
11-ZZ-0932	|-- Exception to C.16.1 1 Required Two fire extinguishers installed by FSAM Fire extinguishers were not installed iwth one in the driver's cab, one in the patient compartment at the time of departure from the final stage Ambulance Manufacturer.	1
13-MH-10A0	Reflector Pkg: Body - 2ea, Side Fr Amber, Side Rear Red, Rear Red	1
13-SB-0003	Post And Wheel Cups: NONE	1
13-SP-TIRE	Spare Tire: Refer To Chassis Section to See if it gets one.	1
34-XX-0002	Secondary Stretcher: NONE included	1
34-XX-5000	Indemnification Statement The purchaser agrees to defend, indemnify and hold REV harmless from any claims, costs (including actual attorneys' fees), damages and liabilities caused in whole or in part by any alteration or modification of, or changes or additions to the Purchased Products OR use of product for purposes it was not designed or intended for.	1
	GENERAL CONVERSION	1
03-00-0001		1
03-14-103M	***2022 **172"** D5500 Dodge 4 x 4 (X-Series) Reg cab Conv PKG 22-4 6/6/22***	***1***
03-ZZ-ZZZZ		1
36-CO-0001	***|-- CHANGE ORDER POLICY***	***1***
36-CO-0010	***|-- After Confirmation, Prior to Engineering*** Change Fee is $100 Per Item, Plus Option Cost	***1***

PART NO	DESCRIPTION	QTY
36-CO-0030	***|-- After Confirmation, After Production Start***	***1***
	Change Fee is $200 Per Item, Plus 200% Option Cost Additional labor charges above option costs may apply to accomodate the change at $200 per hour. Special order or non-stocking parts that are purchased for any ordered option that is subsequently deleted will be charged for and shipped loose. >> Changes after production starts are the most disruptive.	
36-CO-0035	***|-- Change Order Recieved at Delivery ;***	***1***
	$300 charge per item, plus three times the standard option cost AND Any additional labor to accomodate the change at $200 per hour, Effective 01/28/2022	
36-EO-0001	|-- ***END OF ORDER***	1

Big Spring

SERVS The Ambulance People
Michael Jordan

Mock up 1
DRAWN BY: K Jacobs | 9-19-22

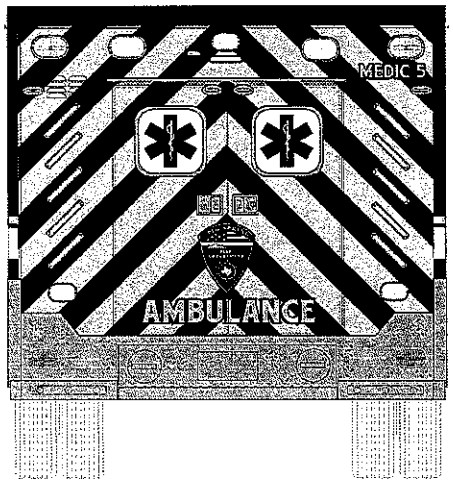

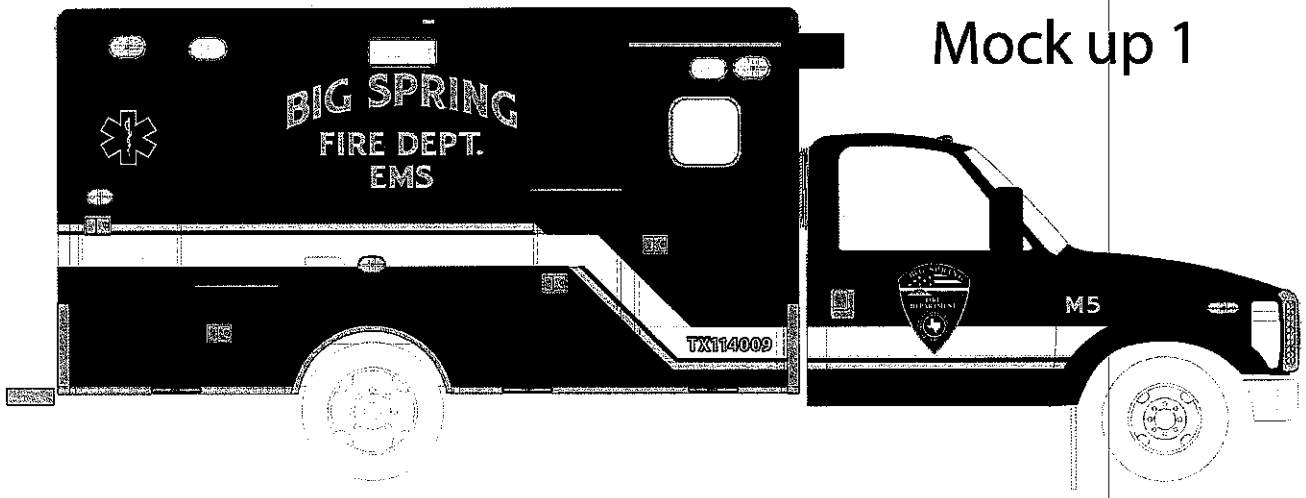

Mock up 1

172"

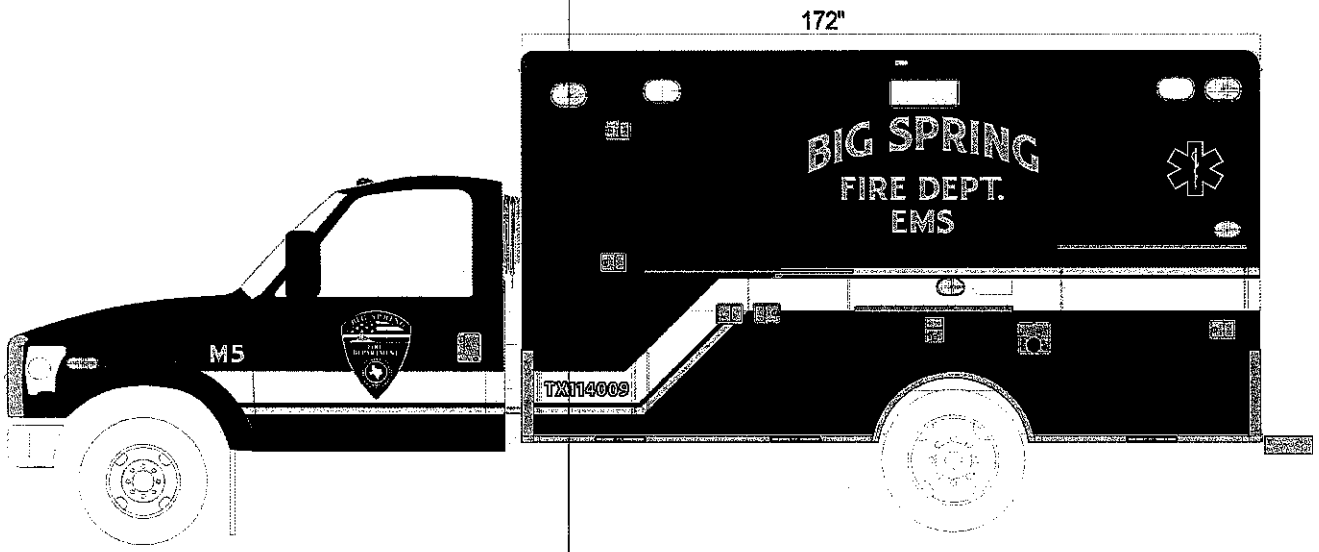

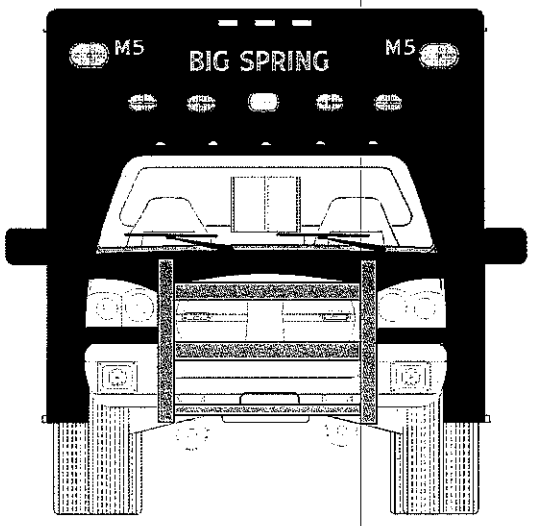

KMP GRAPHICS 800.213.9965 www.kmpgraphics.com

Request changes by emailing michael.j@servsllc.com or kim.jacobs@kmpgroup.com. Or, if artwork is correct, sign below.

Customer must approve proof via email before job can proceed into the production stage; final product/installation will follow the above image. By signing, customer is confirming that the artwork is accurate in quantity and layout, including spelling of any lettering, accuracy of unit/licensing numbers, size and direction of the drop shadow on lettering, direction of snakes in the SOLs, etc. KMP Graphics is not responsible for any omissions, placement, sizing or typographical errors after proof is signed by customer. If specific color matching is critical, we strongly recommend ordering a color swatch print out. If color is unsatisfactory on print without a color swatch print out, re-prints can be re-produced at an additional cost. Please sign, date, scan and email to michael.j@servsllc.com and/or customer.service@kmpgroup.com.

Mock up Approval Signature _____ Date_____

Big Spring

SERVS The Ambulance People
Michael Jordan

Mock up 1

DRAWN BY: K Jacobs | 9-19-22

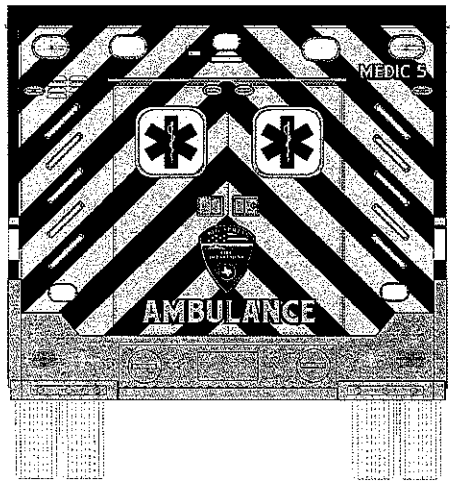

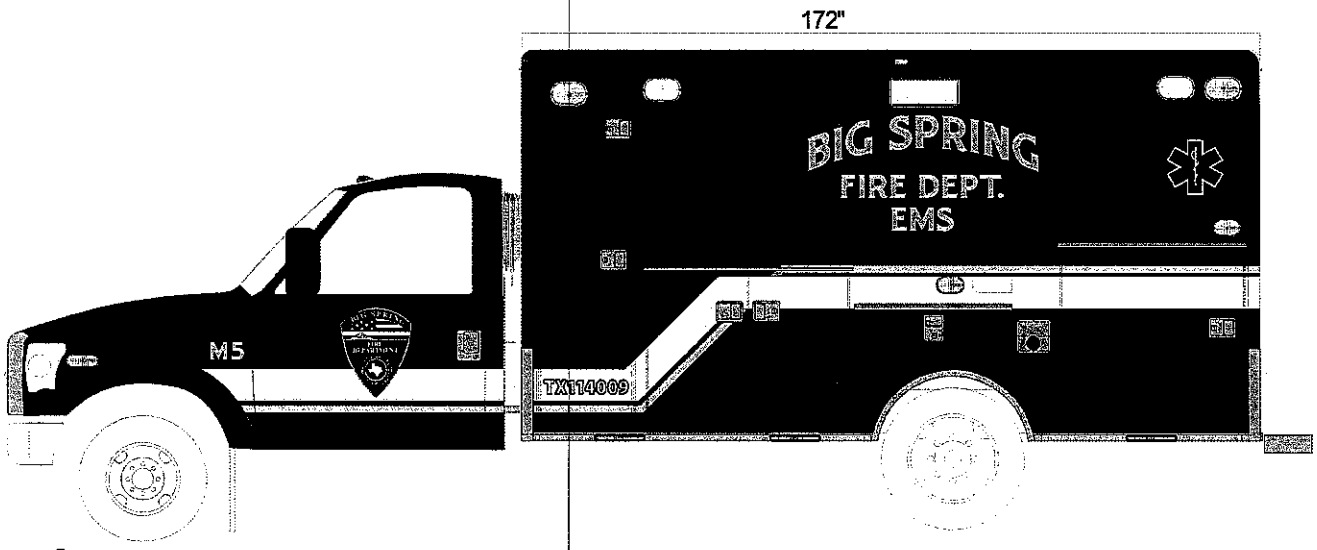

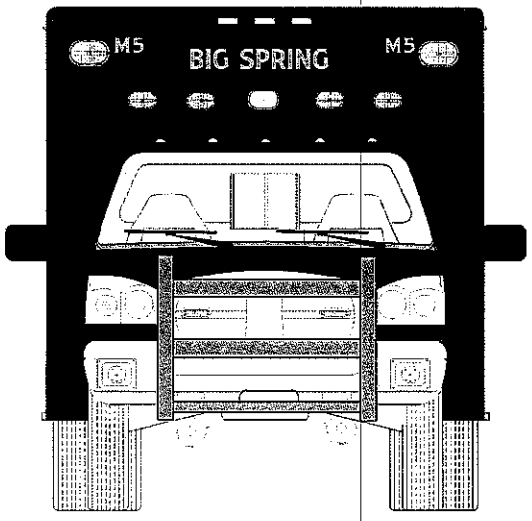

K GRAPHICS 800.213.9965 www.kmpgraphics.com

Request changes by emailing michael.j@servsllc.com or kim.jacobs@kmpgroup.com. Or, if artwork is correct, sign below.

Customer must approve proof via email before job can proceed into the production stage; final product/installation will follow the above image. By signing, customer is confirming that the artwork is accurate in quantity and layout, including spelling of any lettering, accuracy of unit/licensing numbers, size and direction of the drop shadow on lettering, direction of snakes in the SOLs, etc. KMP Graphics is not responsible for any omissions, placement, sizing or typographical errors after proof is signed by customer. If specific color matching is critical, we strongly recommend ordering a color swatch print out. If color is unsatisfactory on print without a color swatch print out, re-prints can be re-produced at an additional cost. Please sign, date, scan and email to michael.j@servsllc.com and/or customer.service@kmpgroup.com.

Mock up Approval Signature _____ Date_____

Big Spring

SERVS The Ambulance People
Michael Jordan

Mock up 1

DRAWN BY: K Jacobs | 9-19-22

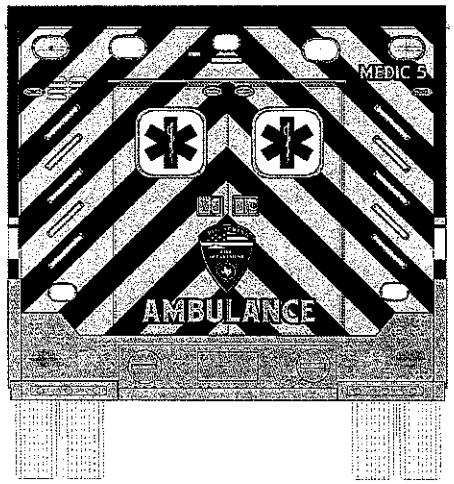

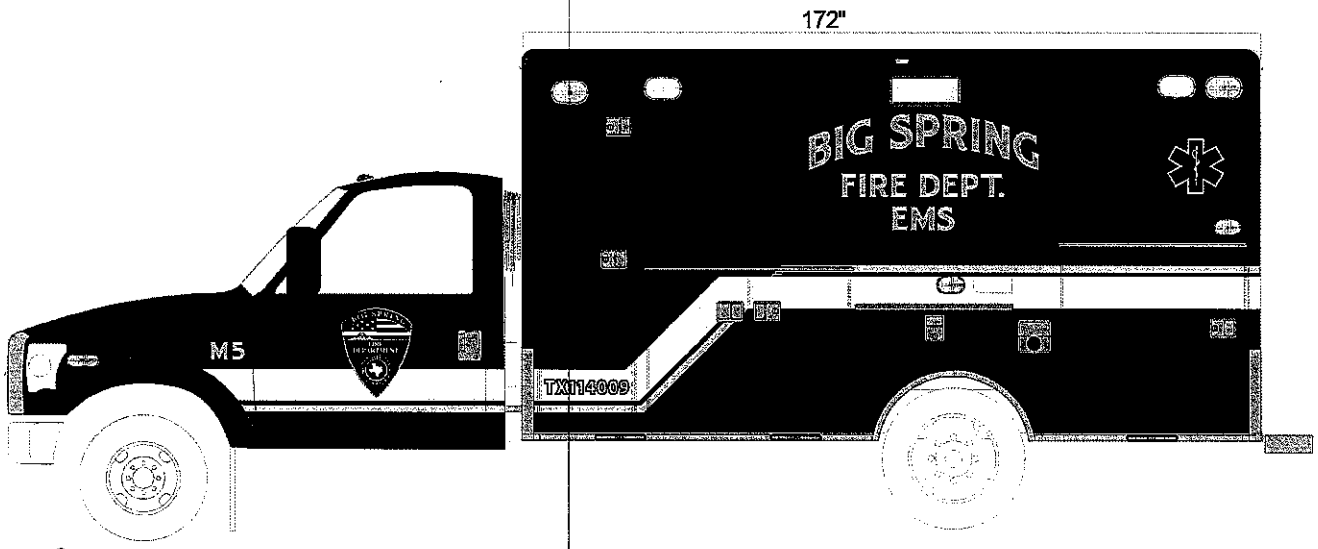

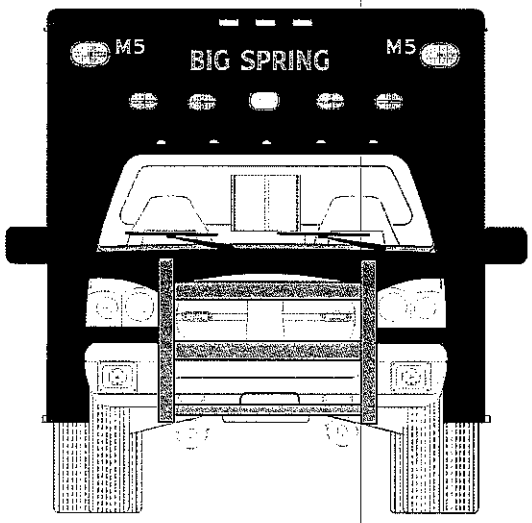

K GRAPHICS 800.213.9965 www.kmpgraphics.com

Request changes by emailing michael.j@servsllc.com or kim.jacobs@kmpgroup.com. Or, if artwork is correct, sign below.

Customer must approve proof via email before job can proceed into the production stage; final product/installation will follow the above image. By signing, customer is confirming that the artwork is accurate in quantity and layout, including spelling of any lettering, accuracy of unit/licensing numbers, size and direction of the drop shadow on lettering, direction of snakes in the SOLs, etc. KMP Graphics is not responsible for any omissions, placement, sizing or typographical errors after proof is signed by customer. If specific color matching is critical, we strongly recommend ordering a color swatch print out. If color is unsatisfactory on print without a color swatch print out, re-prints can be re-produced at an additional cost. Please sign, date, scan and email to michael.j@servsllc.com and/or customer.service@kmpgroup.com.

Mock up Approval Signature _____ Date_____

INTEROFFICE MEMORANDUM

Date: October 2nd, 2022

To: Todd Darden
From: Craig Ferguson, Fire Chief

Re: Capital Purchase of EKG Monitors

Mr. Darden,

In the budget for 2022-2023 the council approved the purchase of two EKG Monitors. We have received a buyboard price from Zoll EKG. These are the same monitors we currently have and match what the SMMC ER uses. The BuyBoard price is $55,755.80.

I recommend we go with Zoll EKG for the purchase of this equipment. This bid meets all the specs we asked for and will go with the Zoll equipment we currently use. They can deliver the monitors in the first quarter of 2023.

The price for the recommended bid is $55,755.08. We have $65,000 in the budget for this equipment.

CITY OF
Big Spring
310 NOLAN BIG SPRING, TEXAS 79720

305356

☑ PURCHASE REQUISITION
☐ DISBURSEMENT VOUCHER
☐ INFORMAL QUOTES ATTACHED
(Required between $1,500.00 and $5,000.00)
☐ FORMAL QUOTES ATTACHED
(Required between $5,001.00 and $24,999.00)

VENDOR: Zoll
269 Mill Rd
Chelmsford, MA 0824

NOTES:

CHARGE TO (PROJECT, ACCOUNT, ETC.)	VENDOR NO.	PURCHASE ORDER NO.	PURCHASING AGENT

	QUANTITY	U/M	STOCK NUMBER	DESCRIPTION	UNIT PRICE	INVOICE NO.	AMOUNT
1	2			Zoll X-Series Monitor	27,877.90	Q39900	55,755.80
2							
3							
4							
5							
6							
7							
8							
9							
10							

SPECIAL INSTRUCTIONS

REQUISITIONED BY J. Holt

TOTAL 55,755.80

BUDGET AVAILABLE:

DEPARTMENT / NAME / NUMBER 260 EMS

DIVISION CHIEF APPROVAL (OVER $1,500.00)

CITY MANAGER APPROVAL (OVER $5,000.00)

10/3/2022
DATE OF ORDER

ORDERING OFFICIAL

PAYMENT AUTHORIZATION

ZOLL Medical Corporation
269 Mill Road
Chelmsford, MA 01824-4105
Federal ID# 04-2711626

Phone: (800) 348-9011
Fax: (978) 421-0015
Email: esales@zoll.com

Quote No: Q-39900 Version: 1

Big Spring Fire Department
1401 Apron Drive
Big Spring, TX 79720

ZOLL Customer No: 100701

Jay Holt
(432) 264-2315
jholt@mybigspring.com

Quote No: Q-39900
Version: 1

Issued Date: August 30, 2022
Expiration Date: September 30, 2022

Terms: NET 30 DAYS

FOB: Shipping Point

Freight: Free Freight

Prepared by: Lavern Smith
EMS Territory Manager
lsmith@zoll.com
+1 5054177965

Item	Contract Reference	Part Number	Description	Qty	List Price	Adj. Price	Total Price
1	949804	601-2221011-01	**X Series Monitor/Defibrillator - 12-Lead ECG, Pacing, NIBP, SpO2, EtCO2, CPR Expansion Pack** Includes: 4 trace tri-mode display monitor/ defibrillator/ printer, advisory algorithm, advanced communications package (Wi-Fi, Bluetooth, USB cellular modem capable) USB data transfer capable and large 6.5in (16.5cm) diagonal screen. Accessories Included: MFC cable and CPR connector, A/C power cord, One (1) roll printer paper, 6.6 Ah Li-ion battery, Carry case, Operator Manual, Quick Reference Guide, and One (1)-year EMS warranty. Parameter Details: Real CPR Help - Dashboard display of CPR Depth and Rate for Adult and Pediatric patients, Visual and audio prompts to coach CPR depth (Adult patient only), Release bar to ensure adequate release off the chest, Metronome to coach rate for Adult and Pediatric patients. See-Thru ® CPR artifact filtering • Interpretative 12-Lead ECG (Full 12 ECG lead view with both dynamic and static 12-lead mode display. 12-Lead OneStep ECG cable - includes 4-Lead limb lead cable and removable precordial 6-Lead set) • ZOLL Noninvasive Pacing Technology • Welch Allyn NIBP with Smartcuff. 10 foot Dual Lumen hose and SureBP Reusable Adult Medium Cuff • Masimo Pulse Oximetry with Signal Extraction Technology (SET), Rainbow SET® • EtCO2 Oridion Microstream Technology. Microstream tubing set sold separately •	2	$42,233.00	$30,565.50	$61,131.00
2	949804	8300-000676	**OneStep Cable, X Series**	2	$506.00	$348.07	$696.14
3	949804	8009-0020	**CPR-D-padz and CPR Stat Padz Connector for R Series**	2	$438.00	$279.56	$559.12

ZOLL Medical Corporation
269 Mill Road
Chelmsford, MA 01824-4105
Federal ID# 04-2711626

Phone: (800) 348-9011
Fax: (978) 421-0015
Email: esales@zoll.com

Big Spring Fire Department
Quote No: Q-39900 Version: 1

Item	Contract Reference	Part Number	Description	Qty	List Price	Adj. Price	Total Price
4	949804	8900-000219-01	**OneStep Pediatric CPR Electrode (1 pair)**	2	$104.00	$75.34	$150.68
5	949804	8000-0895	**Cuff Kit with Welch Allyn Small Adult, Large Adult and Thigh Cuffs**	2	$173.00	$133.87	$267.74
6	949804	8000-001392	**Masimo rainbow® RC-4 - 4FT, Reusable EMS Patient Cable**	2	$278.00	$200.90	$401.80
7	949804	8000-000371	**rainbow® DCI® SpO2/SpCO/SpMet Adult Reusable Sensor with connector (3 ft)**	2	$957.00	$676.00	$1,352.00
8	949804	8000-000372	**rainbow® DCI-P® SpO2/SpCO/SpMet Pediatric Reusable Sensor**	2	$957.00	$676.00	$1,352.00
9	949804	8000-0580-01	**Six hour rechargeable Smart battery**	4	$572.00	$421.00	$1,684.00
10	949804	8000-000876-01	**Paper, Thermal, w/Grid, BPA Free (Box of 6)**	2	$27.00	$19.66	$39.32
11		8400-110041	**CaseReview Premium Subscription, R Series and X Series, 1 Year- Hosted** Provides detailed post-case information, including CPR quality on compression depth, rate, pause time and release velocity, as well as ECG, shocks, EtCO2 and SpO2 vital signs.	2	$561.00	$561.00	$1,122.00
12		6008-9901-61	**ZOLL X Series Trade In Allowance (EMS Group)** See Trade Unit Considerations.	2		($6,500.00)	($13,000.00)

Subtotal: $55,755.80

Total: $55,755.80

Contract Reference	Description
949804	Reflects GPO Npp 2020 - Contract No. PS20200 contract pricing. Notwithstanding anything to the contrary herin, the terms and conditions set forth in NPP 2020 - Contract No. PS20200 shall apply to the customer's purchase of the products set forth on this quote.

Trade Unit Considerations

Trade-In values valid through September 30, 2022 if all equipment purchased is in good operational and cosmetic condition and includes all standard accessories. Trade-In values are dependent on the quantity and configuration of the ZOLL devices listed on this quotation. Customer assumes responsibility for shipping trade-in equipment at the quantities listed on the trade line items in this quotation to ZOLL's Chelmsford Headquarters within 60 days of receipt of new equipment. Customer agrees to pay cash value for trade-in equipment not shipped to ZOLL on a timely basis.

ZOLL Medical Corporation
269 Mill Road
Chelmsford, MA 01824-4105
Federal ID# 04-2711626

Phone: (800) 348-9011
Fax: (978) 421-0015
Email: esales@zoll.com

Big Spring Fire Department
Quote No: Q-39900 Version: 1

To the extent that ZOLL and Customer, or Customer's Representative have negotiated and executed overriding terms and conditions ("Overriding T's & C's"), those terms and conditions would apply to this quotation. In all other cases, this quote is made subject to ZOLL's Standard Commercial Terms and Conditions ("ZOLL T's & C's") which for capital equipment, accessories and consumables can be found at https://www.zoll.com/about-zoll/invoice-terms-and-conditions and for software products can be found at http://www.zoll.com/SSPTC and for hosted software products can be found at http://www.zoll.com/SSHTC. Except in the case of overriding T's and C's, any Purchase Order ("PO") issued in response to this quotation will be deemed to incorporate ZOLL T's & C's, and any other terms and conditions presented shall have no force or effect except to the extent agreed in writing by ZOLL.

1. This Quote expires on September 30, 2022. Pricing is subject to change after this date.
2. Applicable tax, shipping & handling will be added at the time of invoicing.
3. All purchase orders are subject to credit approval before being accepted by ZOLL.
4. To place an order, please forward the purchase order with a copy of this quotation to esales@zoll.com or via fax to 978-421-0015.
5. All discounts from list price are contingent upon payment within the agreed upon terms.
6. Place your future accessory orders online by visiting www.zollwebstore.com.

Order Information (to be completed by the customer)

[X] Tax Exempt Entity (Tax Exempt Certificate must be provided to ZOLL)

[ ] Taxable Entity (Applicable tax will be applied at time of invoice)

BILL TO ADDRESS	SHIP TO ADDRESS
Name/Department:	Name/Department:
Address:	Address:
City / State / Zip Code:	City / State / Zip Code:

Is a Purchase Order (PO) required for the purchase and/or payment of the products listed on this quotation?

[✓] Yes PO Number: 305356 PO Amount: 55,755.89 KY
(A copy of the Purchase Order must be included with this Quote when returned to ZOLL)

[ ] No (Please complete the below section when submitting this order)

For organizations that do not require a PO, ZOLL requires written execution of this order. The person signing below represents and warrants that she or he has the authority to bind the party for which he or she is signing to the terms and prices in this quotation.

Big Spring Fire Department
Authorized Signature:

Name: Jay Holt
Title: Ops Chief
Date: 10/3/2022

BIG SPRING
TEXAS

COMMUNITY SERVICES MEMORANDUM

Date: 10/11/2022

To: Mayor and City Council
Todd Darden, City Manager

From: Hayley Lewis, Community Services Director

Subject: Event Funding Request

We are respectfully requesting City Council approve the staff recommendation of $12,800 for event funding for Oktoberfest hosted by Hotel Settles on October 22, 2022, which will bring in an estimated 104 hotel rooms. We are also requesting City Council approve the staff recommendation of $2,000 for the Crossroads Comic and Toy Show hosted by Tony's Toys to be held on October 22-23, 2022, which will bring in an estimated 20 hotel rooms.

Both events meet the stipulations required by THLA to receive HOT funds and both events will also be funded by the Convention and Visitors Bureau Event Funding budget.

These events are both being brought to City Council in lieu of the Convention and Visitors Bureau due to time constraints on the events.

Event	Received	Event Date	Decision Date	Requested	Total Amount Approved	Event Funding	Advertising	Follow Up
Oktoberfest	8/9/2022	10/22/2022	10/11/2022	$13,000.00				
Crossroads Comic and Toy Show	9/22/2022	10/22-23/2022	10/11/2022	$3,000.00				
				$16,000.00	$0.00	$0.00	$0.00	

Totals:

2021-2022 Event Funding Budget	$75,000.00
Total Funded YTD	$0.00
Available Balance	$75,000.00
Requested This Month	$16,000.00
Pending Balance	$59,000.00
Staff Recommendation	$14,800.00
Pending Balance using Staff Recommendation	$60,200.00

Potential Events	Received	Event date	Amount Funded	Hotel Rooms
Live Drive Through Nativity	9/28/2021	12/10-12/2021	$1,000.00	6
Big Spring Classic & Big Spring Shoot Out	10/12/2021	4/29-5/1/2022 & 6/17-19/2022	$12,000.00	280
A Joyful Season	10/26/2021	4/30-5/1/2022 & 11/5-6/2022	$2,500.00	40
Coach Roy Training/ACES	5/10/2022	06/02-05/2022	$7,000.00	32
Pops in the Park	6/28/2022	7/3/2022	$3,000.00	40
			$25,500.00	

Event Funding October 11, 2022

Event	Hotel Rooms	$150	50% of Hotel Revenue	Advertising	Total	Requesting	Staff Recommendation
Oktoberfest	104	$15,600.00	$7,800.00	$5,000.00	$12,800.00	$13,000.00	**$12,800.00**
Crossroads Comic and Toy Show	20	$3,000.00	$1,500.00	$500.00	$2,000.00	$3,000.00	**$2,000.00**
							$14,800.00

	Event Funding:	Advertising:
Oktoberfest	$7,800.00	$5,000.00
Crossroads Comic and Toy Show	$1,500.00	$500.00

Event Funding Cap	
300+ room nights	$ 25,000.00
200-300	$ 20,000.00
150-200	$ 17,000.00
100-150	$ 15,000.00
75-100	$ 10,000.00
50-75	$ 7,000.00
25-50	$ 5,000.00
11 to 25	$ 2,500.00
Less than 10	$ 1,000.00

CVB Event Funding - Cover Sheet

Event:	Oktober Fest
Event Date:	10/22/2022
Sponsoring Organization:	Hotel Settles
Date Request Received:	8/9/2022
Amount Requested:	$13,000.00
Action:	
Estimated Hotel Rooms on Application	104
Hotel Rooms from Previous Year	104

5 Year Requests

Date Requested	Event Date	$ Funded	Follow-up	Profit/Loss	Hotel Rooms
9/4/2019	10/28/2019	$13,000.00	11/25/2019	-$12,277.70	131
9/30/2020	10/24/2020	$13,000.00	11/12/2020	-$5,178.00	56
9/23/2021	10/16/2021	$7,000.00	11/25/2021	12,551.77	104
10/1/2022	10/22/2022				

VISIT BIG SPRING
TEXAS

Application

Date: 8/9/22

Organization Information

Name of Organization: Hotel Settles

Address: 200 E. 3rd St

City, State, Zip: Big Spring, TX 79720

Contact Name: Emaan Campbell Contact Phone Number: (310)357-9907

Contact Email: emaan@hotelsettles.com

Second Contact Name: Gabrielle Fiemo Second Contact Email: gfiemo@hotelsettles.com

Second Contact Phone Number: _____

Web Site Address for Event or Sponsoring Entity www.hotelsettles.com

Non-Profit or For-Profit status: _____ Tax ID #: _____

Purpose of your organization:
To offer a free community event showcasing our city, vendors, things to do & places to stay

Event Information

Name of Event Oktoberfest

Date of Event 10/22/22

Primary Location of Event: Hotel Settles

THLA Event Funding Formula:

# of Hotel Rooms 104 **X $150(amount per room)=$** 15,600 **X %50 of Hotel Revenue=**
$ 7800

Outside of Howard County Advertising: $ 5000

Total Amount Requested: $ 13,000

VISIT BIG SPRING
TEXAS

How will the funds be used:
The funds will be used to advertise from San Angelo, Midland, Big Spring + Lubbock. It will also assist w/ room rate discounts, give aways, community participation & engagement incentives, bands and food.

Description of Activities Planned (include schedule of events, samples of posters, flyers, ads, etc.) Vendor market bands & music food, corn hole tournament, Games, contests and prizes; play area and fun for the whole family

Questions for All Funding Request Categories:

1. How many years have you held this Event 4

2. Expected Attendance: 600

3. How many people attending the Event will use Big Spring hotels? 250

Number of nights the visitors will stay (approximate): 1-2 nights

4. Do you reserve a room block for this event at an area hotel and if so, for how many rooms and at which hotels:
Surrounding hotels have been given dates to hold rooms.

5. Will you negotiate a special rate or hotel/event package to attract overnight stays?
yes $159 w package

6. How will you measure the impact of your event on area hotel activity (e.g.; room block usage information, survey of hoteliers, etc.)? Increase rooms in town & give guests an opportunity to stay, play and enjoy Big Spring and come back!

7. Please list other organization, government entities, and grants that have offered financial support to your project:
none.

8. Will the event charge admission? Do you anticipate a net profit from the event? If there is a net profit, what is the anticipated amount and how will it be used?

VISIT BIG SPRING
TEXAS

no admission. profit of about $2000-$3000. Mainly this event is to bring people to Big Spring and get the community at.

9. Please list all promotion efforts your organization is coordinating and the amount financially committed to each media outlet:

	Local:	Out of Area:
Newspaper:	Herald	Telegram
Radio:	Ebest	Townsquare
Tv:		
Other Paid Advertising:	facebook, instagram	

Number of Press Releases to Media 4-5
Number Direct Mailings to out-of-town recipients Ø
Other Promotions boosted fb and ig posts

10. Will you include a link to the CVB or other source on your promotional handouts and in your website? yes

11. What new marketing initiatives will you utilize to promote hotel and convention activity for this event? Also include any marketing outside of Howard County.
our tik tok as it has gained popularity. complimentary stays to organizations in Midland

This event is: ✓ Regional ___ Statewide ___ National ___ International

Does this event fall under the Texas Hotel Lodging Two Part Test:

1. Heads in Beds?

(a.) Yes b. No

✓ Convention Centers/Visitor Information Center __ Registration of Convention Delegates
✓ Advertising __ Promotions of Arts __ Historical Restoration or Preservation __ Sporting Events
__ Transportation ✓ Signage

I have read and I understand the requirements of the Convention and Visitors Bureau event funding application. I understand that failure to submit a follow up report within 90 days could possibly result in my event not receiving funds in the following year. ___ Initial

Signature

8/9/22
Date

Emeran Campbell
Printed Name

OKTOBERFEST

COME & ENJOY A DAY OUT WITH THE WHOLE FAMILY!

OCT
22
2022

6PM | SATURDAY

HOTEL SETTLES - EAST LAWN

DJ & BANDS ALL NIGHT

VENDOR FAIR - GERMAN BEER & FOOD
COSTUME CONTEST - CORNHOLE TOURNAMENT - GAMES & PRIZES

CVB Event Funding - Cover Sheet

Event:	Crossroads Comic and Toy Show
Event Date:	10/22-23/2022
Sponsoring Organization:	Tony's Toys
Date Request Received:	9/22/2022
Amount Requested:	$3,000.00
Action:	
Estimated Hotel Rooms on Application	20
Hotel Rooms from Previous Year	

5 Year Requests

Date Requested	Event Date	$ Funded	Follow-up	Profit/Loss	Hotel Rooms

VISIT BIG SPRING
TEXAS

Application

Date: 9-22-22

Organization Information

Name of Organization:
Tony's Toys

Address:
1404 Austin St

City, State, Zip:
Big Spring TX 79720

Contact Name: Antonio Perez Contact Phone Number: 432-312-4960

Contact Email: Ap.superman26@gmail.com

Second Contact Name: N/A Second Contact Email: N/A

Second Contact Phone Number: N/A

Web Site Address for Event or Sponsoring Entity _____

Non-Profit or For-Profit status: _____ Tax ID #: 27-4520450

Purpose of your organization:

_____

_____

_____

Event Information

Name of Event Crossroads comic and Toy show

Date of Event Oct 22 and 23

Primary Location of Event: Dora Roberts community center

THLA Event Funding Formula:

# of Hotel Rooms 20 **X $150(amount per room)=$** 3,000 **X %50 of Hotel Revenue=** $1,500

$1,500

Outside of Howard County Advertising: $ 500

Total Amount Requested: $ $2000.00

VISIT BIG SPRING
TEXAS

How will the funds be used:
Will be used to pay Hotel rooms for Celeb guest that will be Attending the Show, promoting the Show, on the radio, flyers, pop up events

Description of Activities Planned (include schedule of events, samples of posters, flyers, ads, etc.) Have already set up at the fair to push the Show, but now I will be set up at city Trade days This saturday, also starting trade days in oct 9th. Than will be at a Trade Show in midland, promoting the Show local Businesses will have flyers.

Questions for All Funding Request Categories:

1. How many years have you held this Event 1

2. Expected Attendance: 600

3. How many people attending the Event will use Big Spring hotels? 250

Number of nights the visitors will stay (approximate): 2

4. Do you reserve a room block for this event at an area hotel and if so, for how many rooms and at which hotels:
Yes, 25 rooms at TownePlace suites

5. Will you negotiate a special rate or hotel/event package to attract overnight stays?
Yes, Have announced for out of town Vendors and visitors to mention The Show, when They Book a room, for the discount price

6. How will you measure the impact of your event on area hotel activity (e.g.; room block usage information, survey of hoteliers, etc.)? I am especting a great turnout for this Show since Big Spring Has Never had a Show Like this Before.

7. Please list other organization, government entities, and grants that have offered financial support to your project:
N/A

8. Will the event charge admission? Do you anticipate a net profit from the event? If there is a net profit, what is the anticipated amount and how will it be used?

VISIT BIG SPRING
TEXAS

Yes, $5 entry fee, depending on profit, will be used to book a venue for next years show, with different celeb guest, Helping Local Business grow.

9. Please list all promotion efforts your organization is coordinating and the amount financially committed to each media outlet:

	Local:	Out of Area:
Newspaper:	N/A	N/A
Radio:	$800 95.7	
Tv:	N/A	N/A
Other Paid Advertising:	fb ads $400	
Instagram Ads	$200	

Number of Press Releases to Media 2

Number Direct Mailings to out-of-town recipients _____

Other Promotions Promoting at Trade Shows, flyers at Local Businesses Pop up events in Midland/Odessa, San Angelo, Abilene

10. Will you include a link to the CVB or other source on your promotional handouts and in your website? Yes

11. What new marketing initiatives will you utilize to promote hotel and convention activity for this event? Also include any marketing outside of Howard County.

doing fb marketing, currently trying to partner up cinema theatre to promote the Snow Sign on Gregg. Marketing on News West 9 first week of October, a handful of stores have flyers in midland gamestop, Hot Topic, Entertain Mart

This event is: ___Regional ___ Statewide ___ National ___International

Does this event fall under the Texas Hotel Lodging Two Part Test:

1. Heads in Beds?

(a.) Yes b. No

✓ Convention Centers/Visitor Information Center __Registration of Convention Delegates

__ Advertising ✓ Promotions of Arts __Historical Restoration or Preservation __Sporting Events

__Transportation __ Signage

I have read and I understand the requirements of the Convention and Visitors Bureau event funding application. I understand that failure to submit a follow up report within 90 days could possibly result in my event not receiving funds in the following year. AP Initial

Antonio Perez 9-22-22

Signature Date

Antonio Perez

Printed Name

VISIT BIG SPRING
TEXAS

Pre Event

REVENUE:

Start up Revenue (from previous proceeds, other sponsors, etc.)

Please list all sponsors individually

	Projected	
Tubb quarries	$200	
entry fee		
Total Projected Revenue	$	$

EXPENSES:

Venue dora Roberts center	$900	
celeb flights	$32000	
Celeb ~~flight~~ cals	$800.00	
Radio promotingn	$900.00	
fb promotion	$500.00	
pop up events	$600.00	
flyers, Posters	$200.00	
Total Projected Expenses	$6200.00	$
Projected Profit (Loss)	$15.00	$

RESOLUTION NO. _____

A RESOLUTION OF THE CITY COUNCIL OF THE CITY OF BIG SPRING, TEXAS, REPEALING CITY COUNCIL RESOLUTION 013-2022 WHICH AUTHORIZED AND DIRECTED THE CITY MANAGER TO SUBMIT AN APPLICATION FOR A SAFER GRANT ON BEHALF OF THE FIRE DEPARTMENT; PROVIDING FOR SEVERABILITY; AND PROVIDING AN EFFECTIVE DATE

WHEREAS, due to the City's limited budget; City Council finds it necessary to proceed as follows;

NOW, THEREFORE, BE IT RESOLVED BY THE CITY COUNCIL OF THE CITY OF BIG SPRING, TEXAS, AS FOLLOWS, THAT:

SECTION 1. The Big Spring City Council hereby repeals Resolution 013-2022 in its entirety.

~~The City Manager or his designee is hereby authorized and directed to file an application, and to submit any needed information or documentation required with said application, for a SAFER Grant.~~

~~This Council hereby acknowledges and agrees that if the City's application is approved, participation in the SAFER Grant Program will require compliance with the Program's guidelines and assurances.~~

PASSED AND APPROVED on first reading at a regular meeting of the City Council on the **11th** day of **October**, **2022** with all members of the Council voting "aye" for the passage of same.

PASSED AND APPROVED on second and final reading at a regular meeting of the City Council on the **25th** day of **October**, **2022** with all members of the Council voting "aye" for the passage of same.

_____
Robert H. Moore, III, Mayor

ATTEST:

_____
Tami L. Davis, City Secretary

ORDINANCE NO. _____

AN ORDINANCE OF THE CITY COUNCIL OF THE CITY OF BIG SPRING, TEXAS AMENDING THE BIG SPRING CITY CODE, CHAPTER 44 "SOLID WASTE" ARTICLE I "IN GENERAL," SECTION 44-7 "COLLECTION BY CITY; EXCEPTION," SUBSECTION (d) TO UPDATE THE SECTION WITH NEW BIG SANDY LANDFILL ADDRESS; AND AMENDING SECTION 44-8 "COLLECTION OF CITY-FURNISHED CONTAINERS," SUBSECTION (c), TO PROHIBIT THE BLOCKING OF CONTAINERS SET BY THE USER; PROVIDING FOR SEVERABILITY; PROVIDING FOR PUBLICATION; AND PROVIDING AN EFFECTIVE DATE

WHEREAS, the City Council finds that the address referenced in the ordinance has not been updated to reflect the location of the new Big Sandy Landfill; and

WHEREAS, the City Council finds that a modification of the existing ordinance is required to allow placement of rollout containers by the user and prohibit the blocking thereof;

NOW, THEREFORE, BE IT ORDAINED BY THE CITY COUNCIL OF THE CITY OF BIG SPRING, TEXAS, AS FOLLOWS:

SECTION 1. The City of Big Spring Code of Ordinances Chapter 44 entitled "Solid Waste," Article I "In General," Section 44-7 "Collection by city; exception" Subsection (d) is hereby partially amended to read as follows:

Sec. 44-7. Collection by city; exception.

…

(d) Exception. The private collection of brush, shrubs, leaves, grass, and tree trimmings and cutting of such for hire, or otherwise, shall be allowed notwithstanding the provisions of this section; provided, however, such brush, shrubs, grass, and tree trimmings and cuttings shall be transported in a covered vehicle to the city landfill located at ~~4100 E FM 700.~~ 3601 Old Colorado City Highway.

SECTION 2. The City of Big Spring Code of Ordinances Chapter 44 entitled "Solid Waste," Article I "In General," Section 44-8 "Collection of city-furnished containers," Subsection (c) is hereby amended to read as follows:

Sec. 44-8. – Collection of city-furnished containers.

…

(d) It shall be unlawful for any person, firm or corporation to block access to solid waste containers ~~placed by the sanitation department~~ in a manner that hinders the collection of solid waste. In

the event a solid waste container is located in a street within ten (10) feet of the driveway of the residence to which it is assigned, there is a rebuttable presumption that the container was placed by the authority of the public works director or his designee.

NOTE: Language to be added appears underlined and language to be deleted is ~~stricken~~.

SECTION 3. Should any section, paragraph, sentence, clause, phrase, or word of this Ordinance be declared unconstitutional or invalid for any purpose, the remainder of this Ordinance shall not be affected thereby.

SECTION 4. All ordinances or parts of ordinances in conflict herewith are hereby repealed to the extent of the conflict.

SECTION 5. The City Secretary is hereby ordered and directed to cause the descriptive caption as well as the penalties for violation of this ordinance to be published as required by law.

SECTION 6. This ordinance shall take effect immediately after its publication in accordance with the provisions of Section 52.013, Texas Local Government Code, and it is accordingly so ordained.

PASSED AND APPROVED on first reading at a regular meeting of the City Council on the **11th** day of **October**, **2022**, with all members of the Council present voting "aye" for the passage of same.

PASSED AND APPROVED on second and final reading at a regular meeting of the City Council on the **25th** day of **October**, **2022**, with all members of the Council present voting "aye" for the passage of same.

_____
Robert H. Moore, III, Mayor

ATTEST:

_____
Tami L. Davis, City Secretary